Problems of Modern Physics

Lecture 2

Semion K. Saikin
Department of Chemistry and Chemical Biology
Harvard University

Email: saykin@fas.harvard.edu

Physical realization of qubits

Requirements for qubits

- Ability to scale the architecture to a large number of qubits.
- Initialization (set all qubits to 0) should be possible.
- Precise single and two-qubits quantum operations.
- Slow error rate (slow decoherence as compared to gate time).
- Reliable output of the final result.

Effective two-level systems

Spin 1/2 states

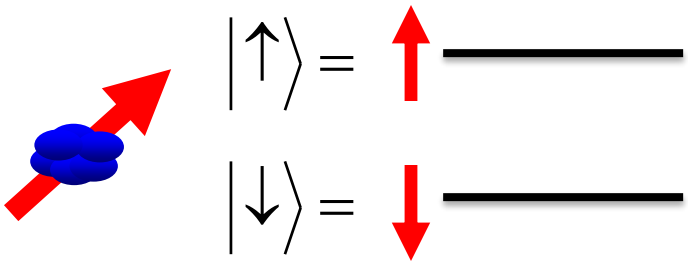

Light polarization

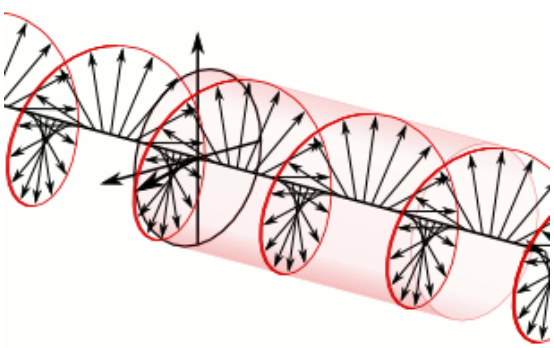

$$|\uparrow\rangle = |+\rangle$$

$$|\downarrow\rangle = |-\rangle$$

http://commons.wikimedia.org/wiki/File:Circular.Polarization.Circularly.Polarized.Light_Left.Hand.Animation.305x190.255Colors.gif

Energy levels in an anharmonic potential

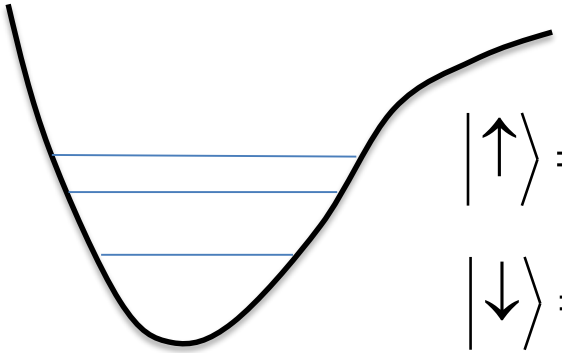

$$|\uparrow\rangle = |e_2\rangle$$

$$|\downarrow\rangle = |e_1\rangle$$

~~Harmonic potential~~

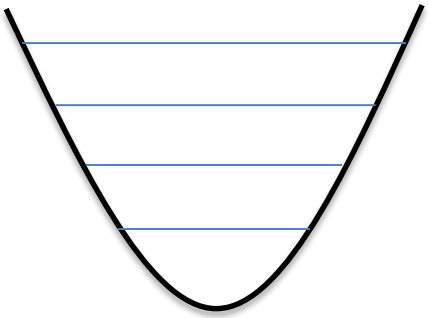

Impurity spins

^{31}P electron spin
(T=4.2K)
T_1~ min T_2~ msecs

Diamond crystal structure

P atom
(group-V)

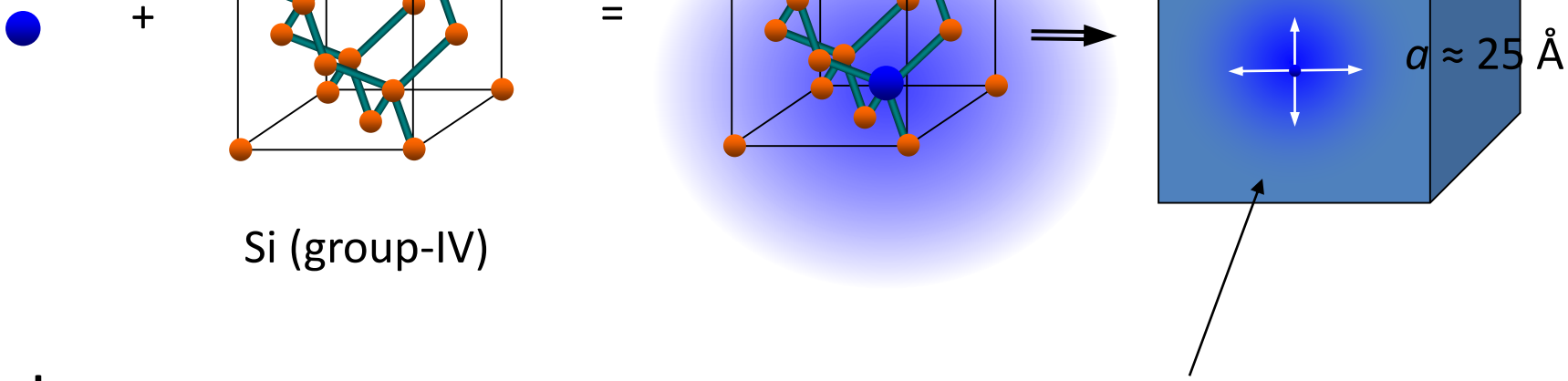

Si (group-IV)

Natural Phosphorus:
^{31}P – 100%
I=1/2

Electron wave function: $F(\mathbf{r}) = \frac{1}{\sqrt{\pi ab}} e^{-\sqrt{(x^2+y^2)/a^2+z^2/b^2}}$

Nuclear spin qubits: model

^{31}P donor
qubit – nuclear spin
qubit-qubit interaction – electron spin

B.E.Kane, Nature **393** 133 (1998)

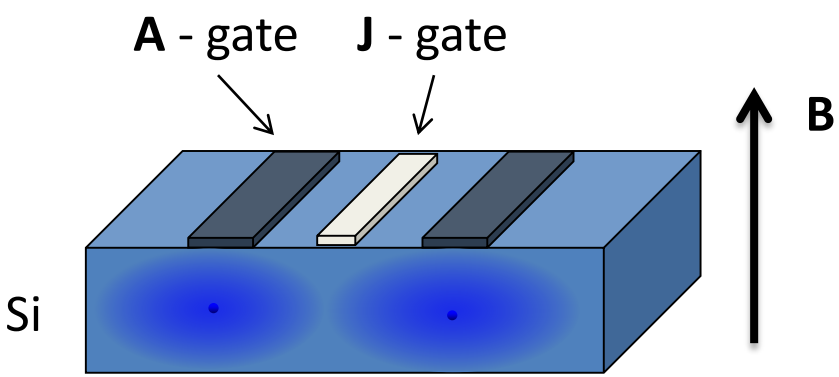

$$H_{ex} = \mathbf{S}_1 \mathbf{J}(E) \mathbf{S}_2$$

$$H_{hf} = \mathbf{S}_1 \mathbf{A}(E) \mathbf{I}_1$$

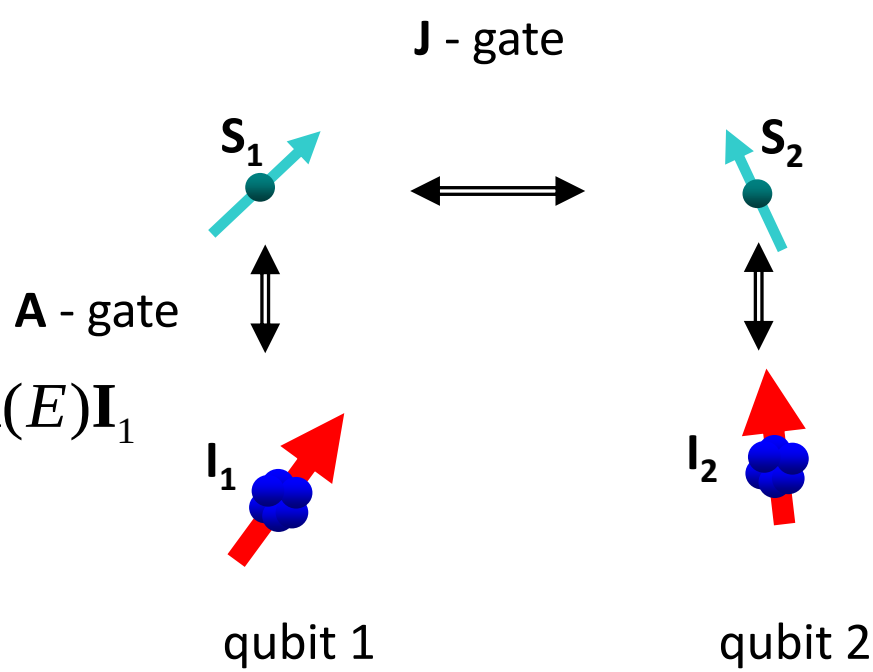

Electron spin qubits: model

^{31}P donor
Qubit – electron spin
Qubit-qubit inteaction – electron spin

R.Vrijen, et. al.,
Phys. Rev. A **62**, 012306 (2000)

Si_xGe_{1-x}

$Si_{1-x}Ge_x$

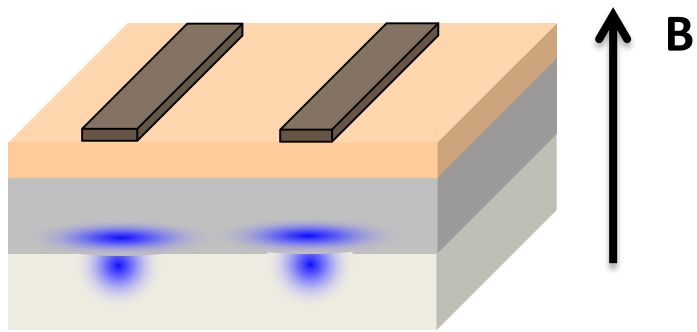

$$H_{ex} = \mathbf{S}_1 \mathbf{J}(E) \mathbf{S}_2$$

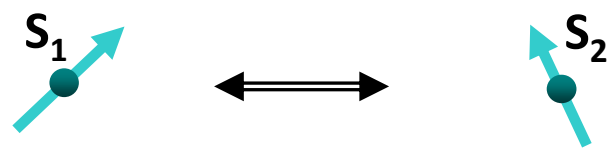

qubit 1 qubit 2

Bohr Radius:
Si: $a \approx 25$ Å
$b \approx 15$ Å

Ge: $a \approx 64$ Å
$b \approx 24$ Å

Nuclear spin qubits: initialization

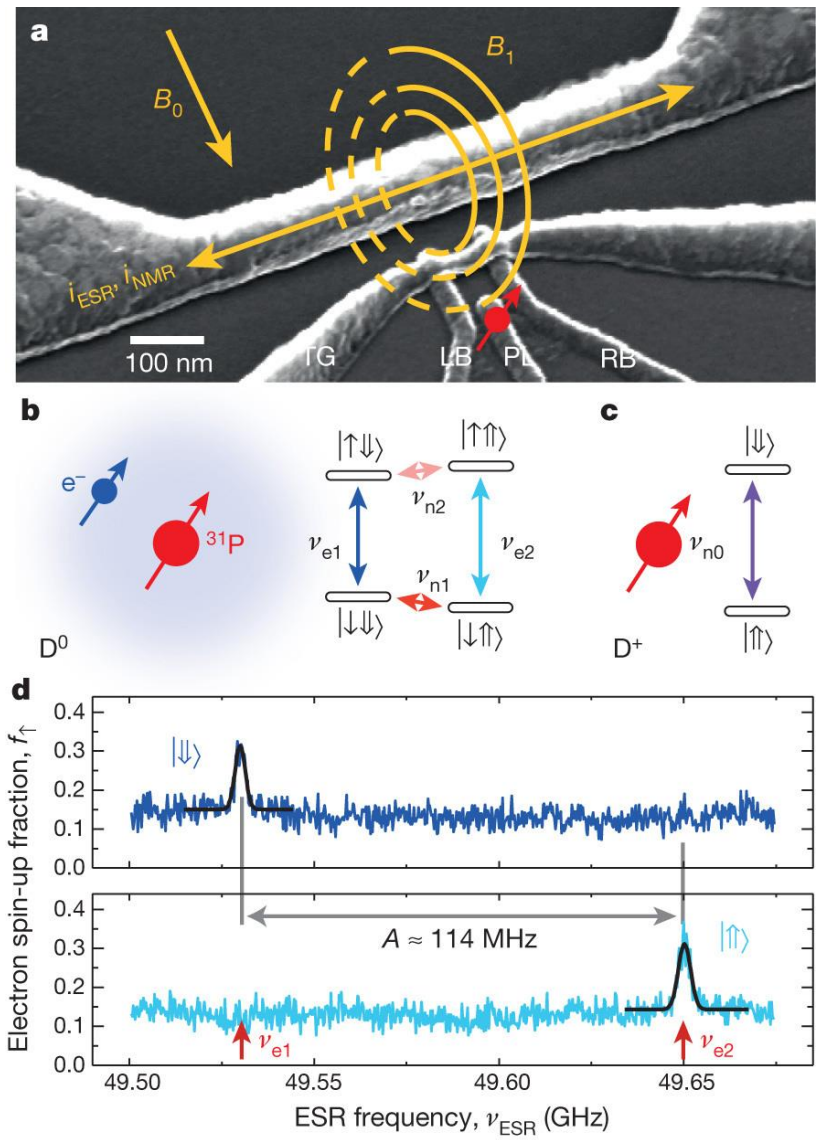

T = 300 mK
B_0 ~ 1 T

J. J. Pla, et. al., Nature **496**, 334 (2013)

Nuclear spin qubits: Rabi oscillations

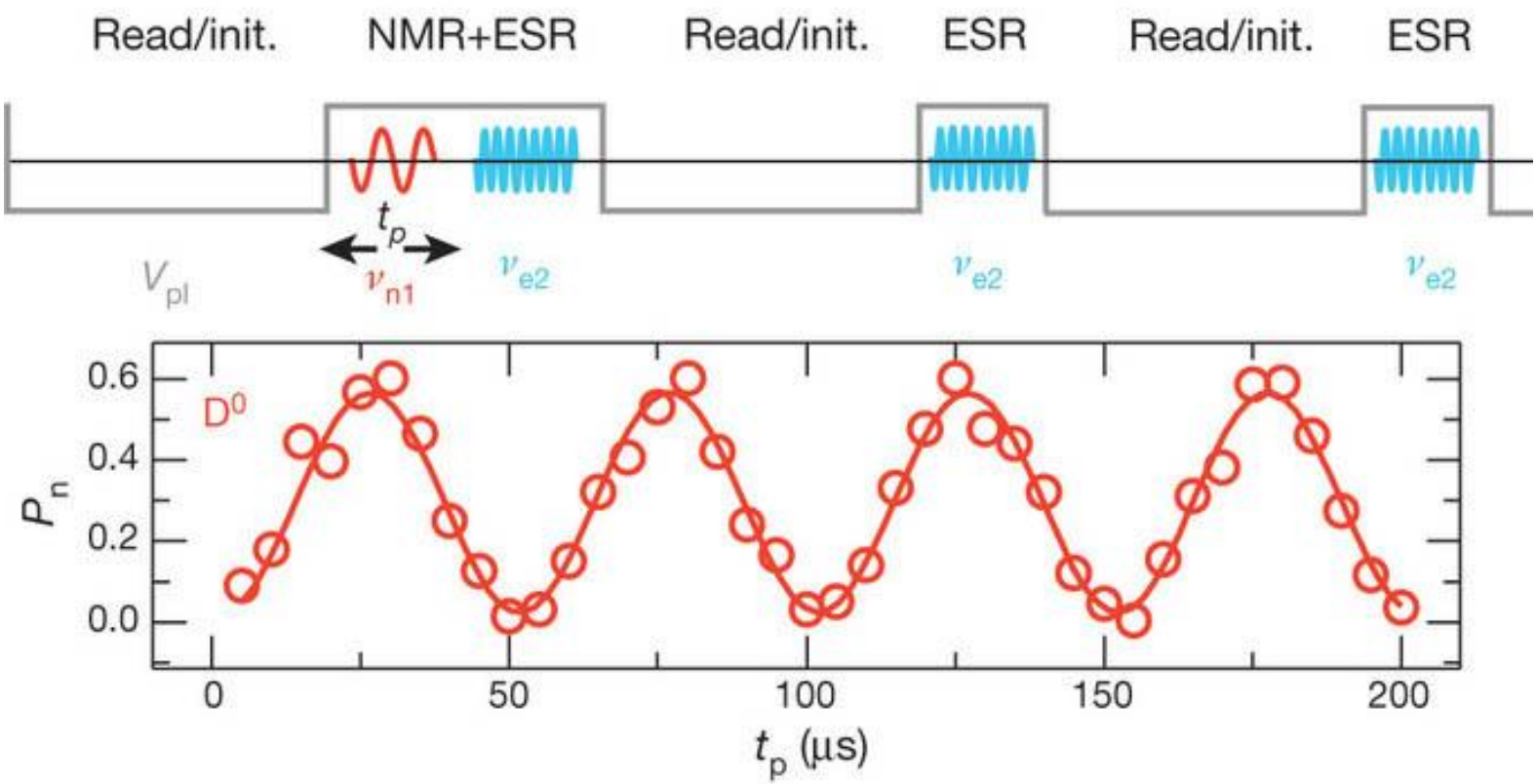

J. J. Pla, et. al., Nature **496**, 334 (2013)

Nuclear spin qubits: Ramsey fringes

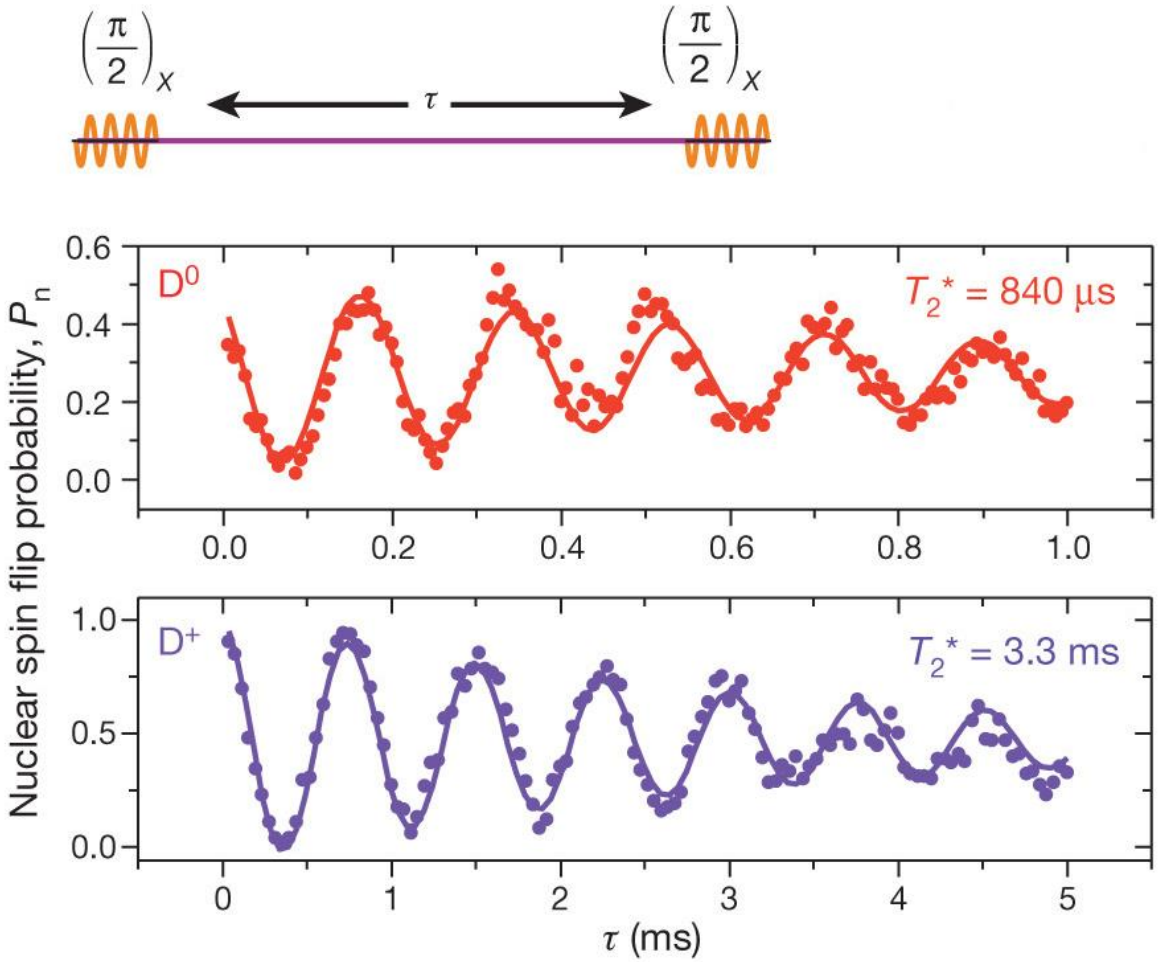

J. J. Pla, et. al., Nature **496**, 334 (2013)

Electron spin in N-V$^-$ centers

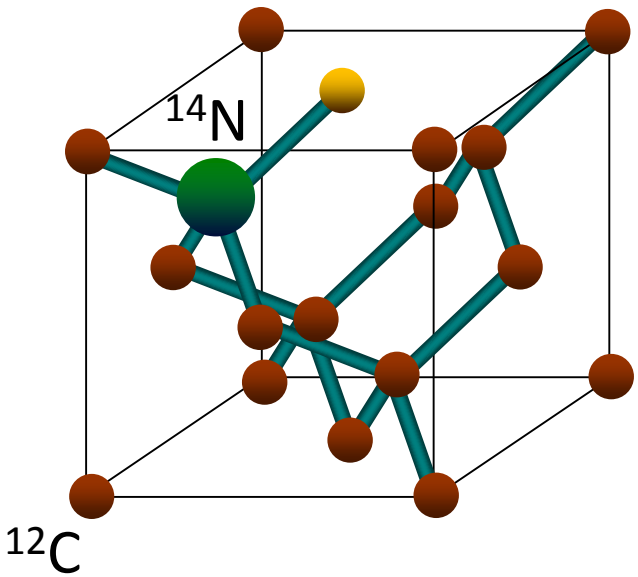

C (group IV)

N (group V)

Energy level structure

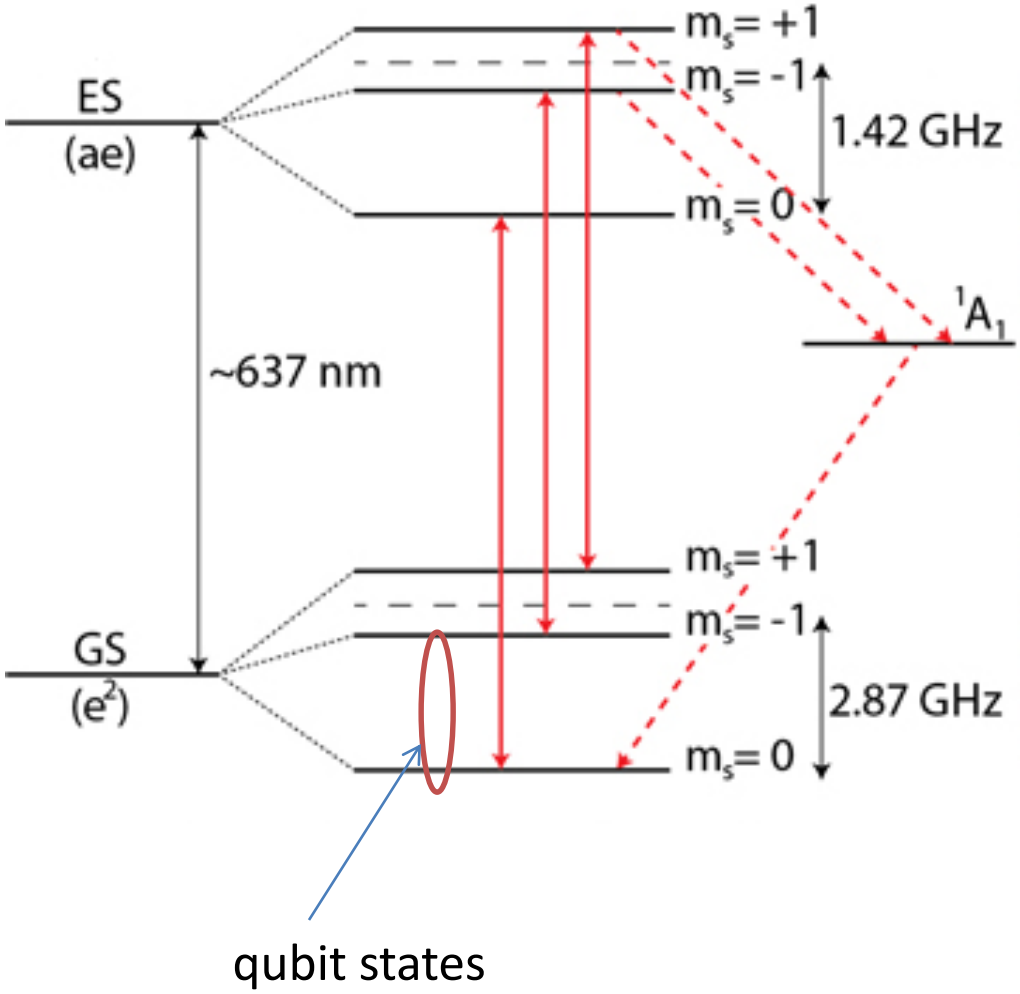

Semiconductor quantum dots

Gated QD

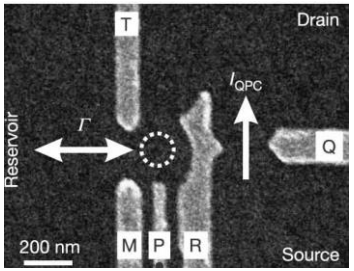

Elzerman et al.
Nature **430**, 431(2004)

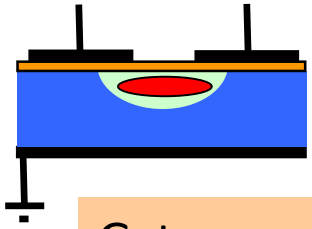

Gate depletion

Interface fluctuation QDs

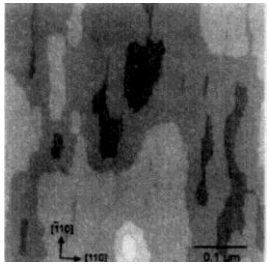

D.Gammon, *et al.*,
PRL **76,** 3005 (1996)

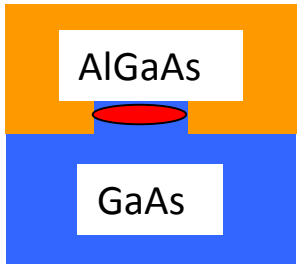

Interface imperfections

Self-assembled dots

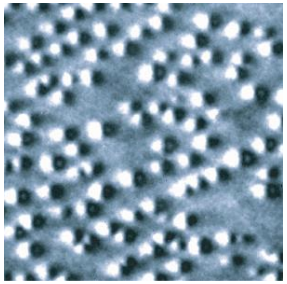

NIST website

0.1 μm

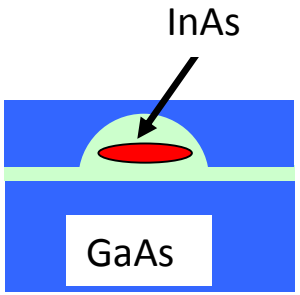

Lattice mismatch

QDs: energy level structure

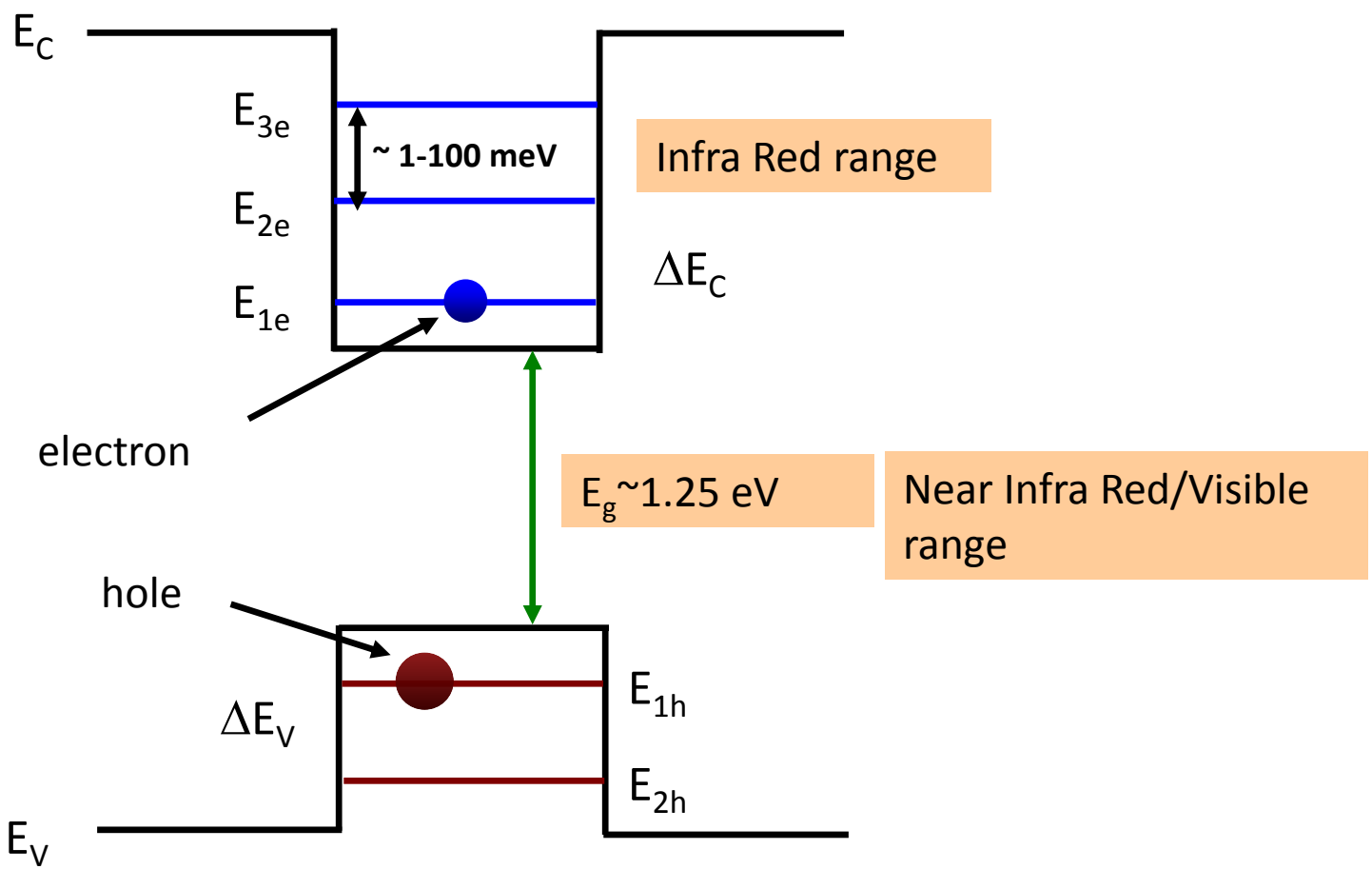

Spacing between the energy levels can be controlled using different materials or by design.

Few charge carriers

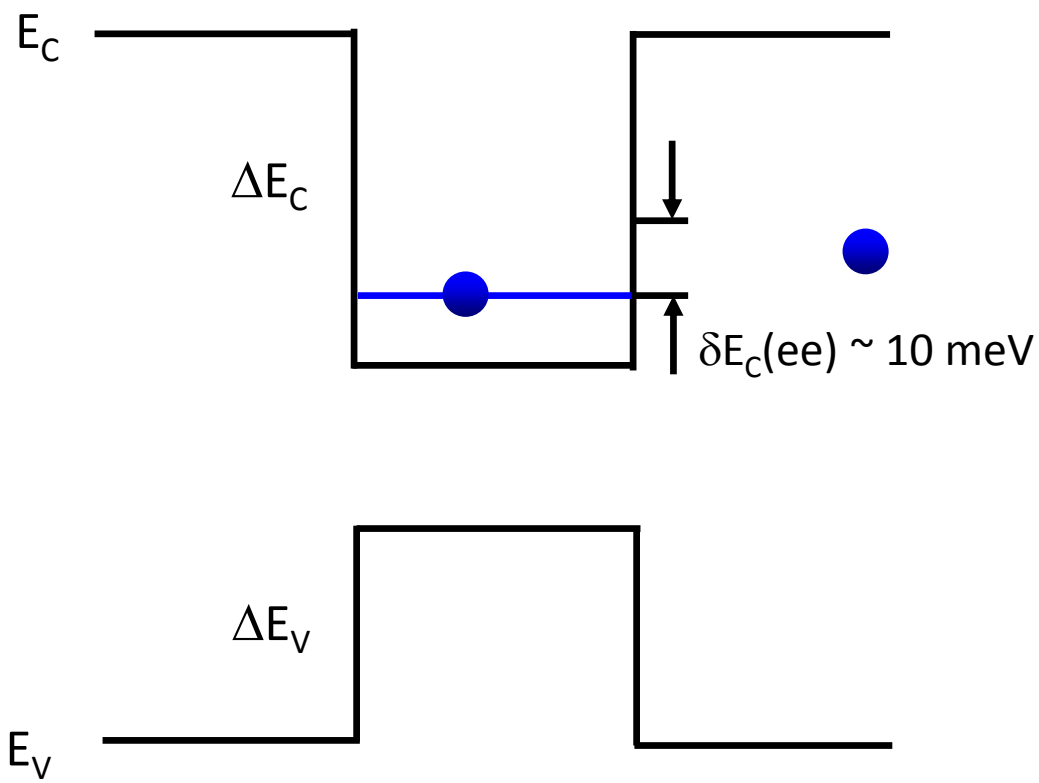

Spin states

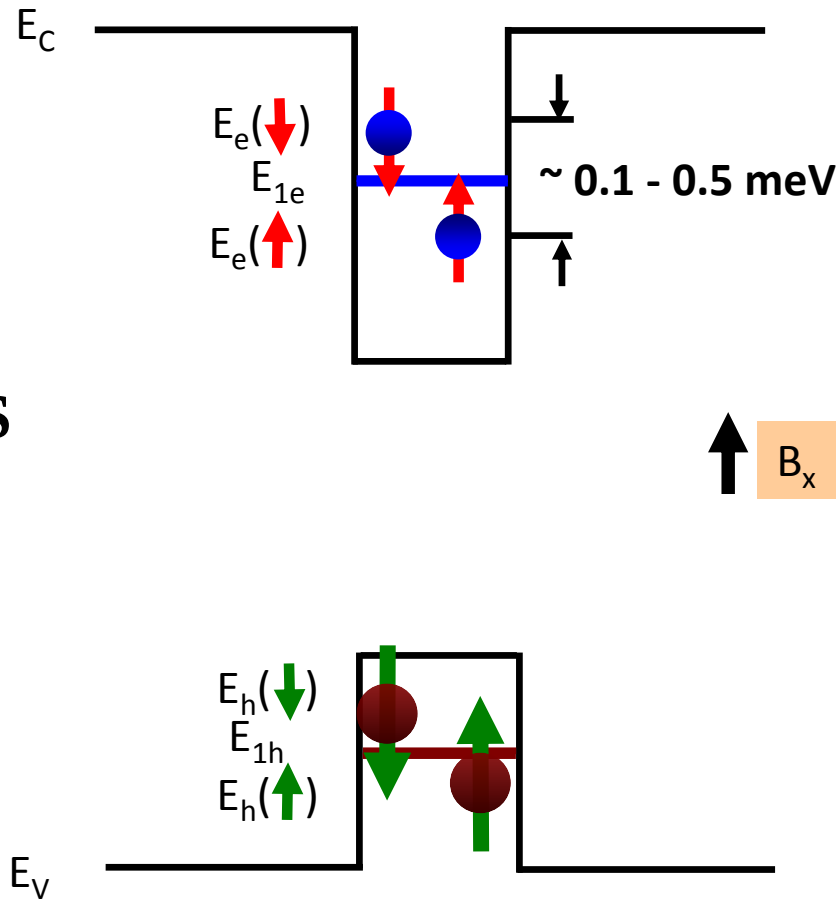

$$\boldsymbol{\mu} = -g\mu_B \mathbf{S}$$

$$H = -\boldsymbol{\mu}\mathbf{B}$$

Low temperature: T_{relax} ~ 10 ms, T_{deph} ~ 10 μs

Room temperature: $T_{relax} \geq 1$ ns, $T_{deph} \geq 0.1$ ns (lower boundary)

Coupling with light: empty QDs

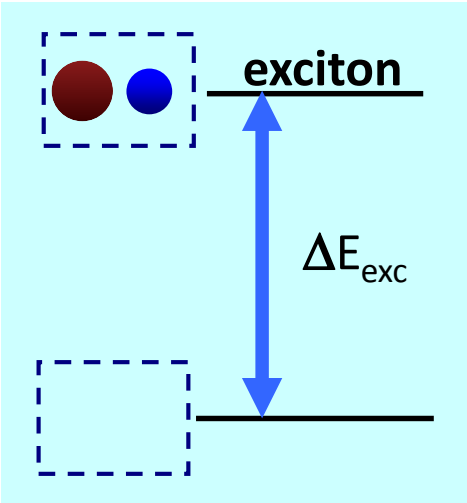

Photon $h\nu = \Delta E_{exc}$

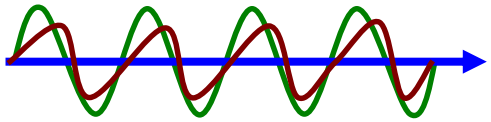

Exciton relaxation time ~ 1 ns

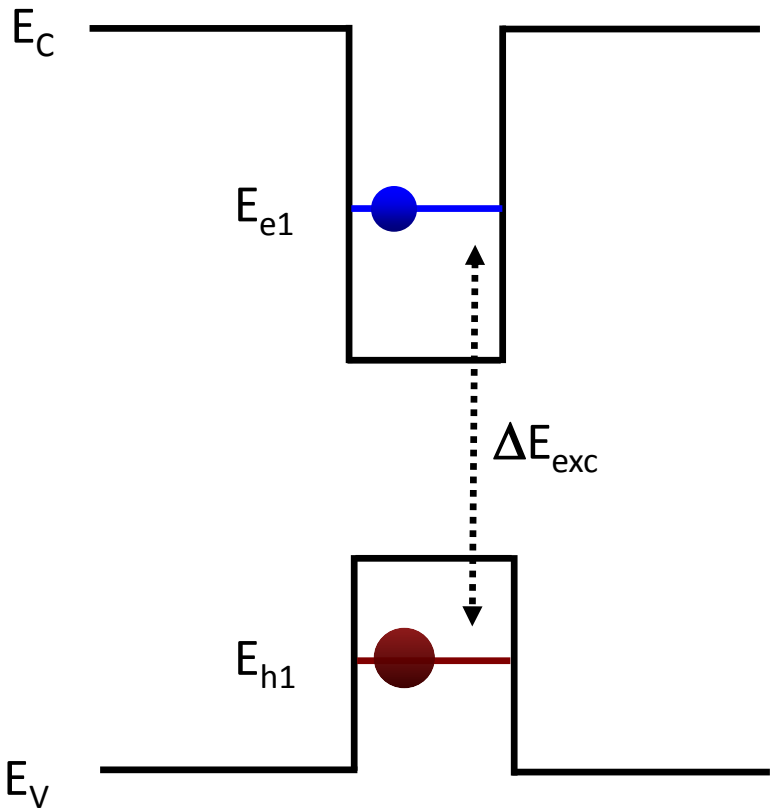

Coupling with light: trions

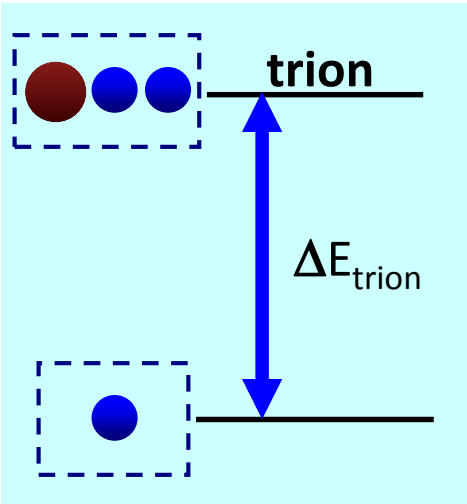

Photon $h\nu = \Delta E_{trion}$

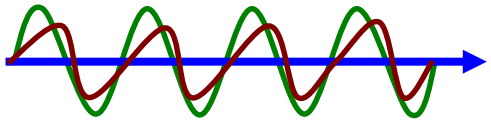

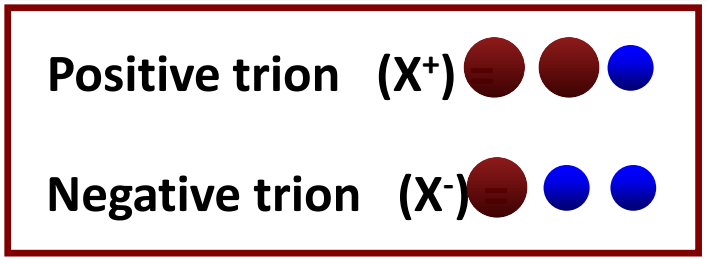

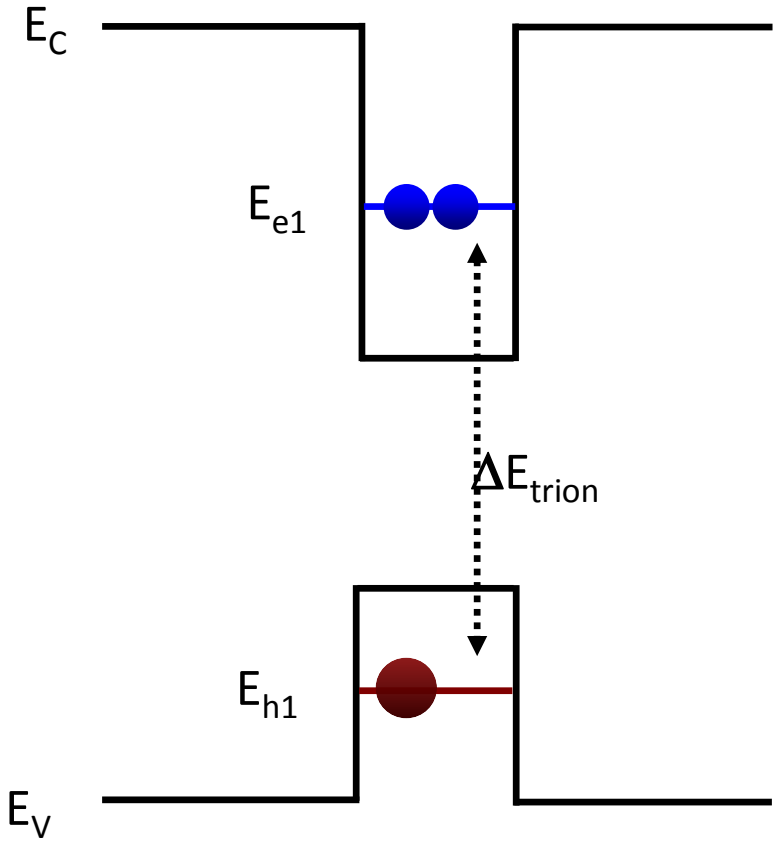

Polarizaiton effects

Photon $h\nu=\Delta E$

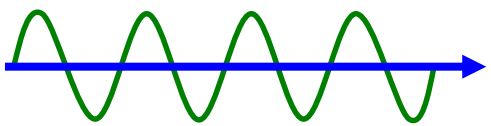

Linear polarization, V[1,0,0]

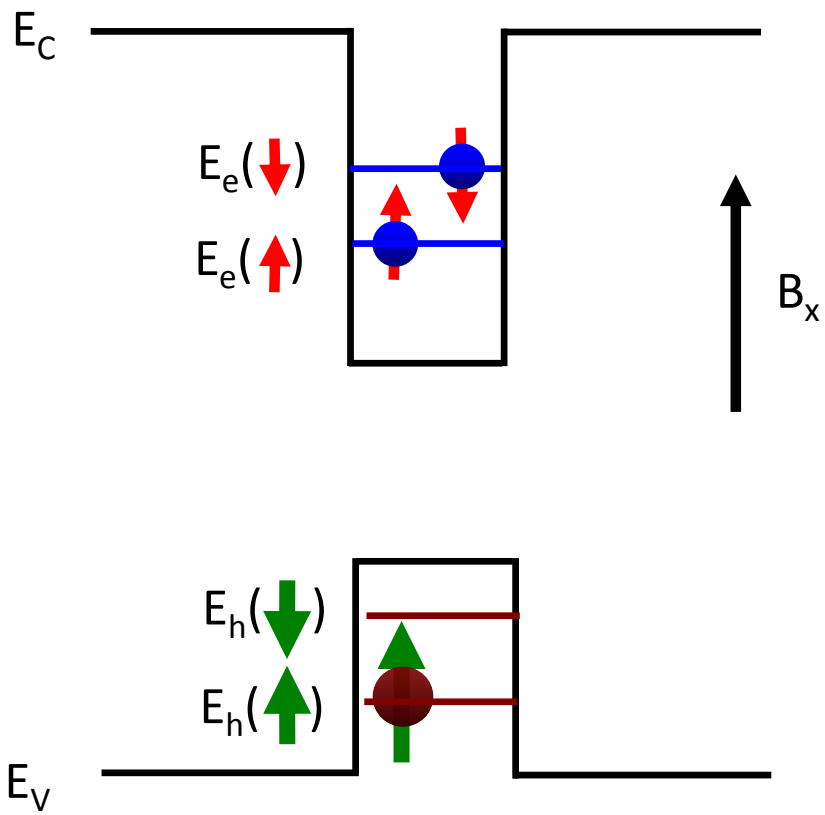

Polarizaiton effects

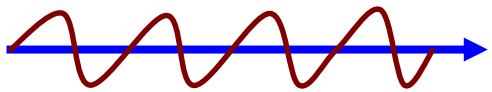

Linear polarization, H[0,1,0]

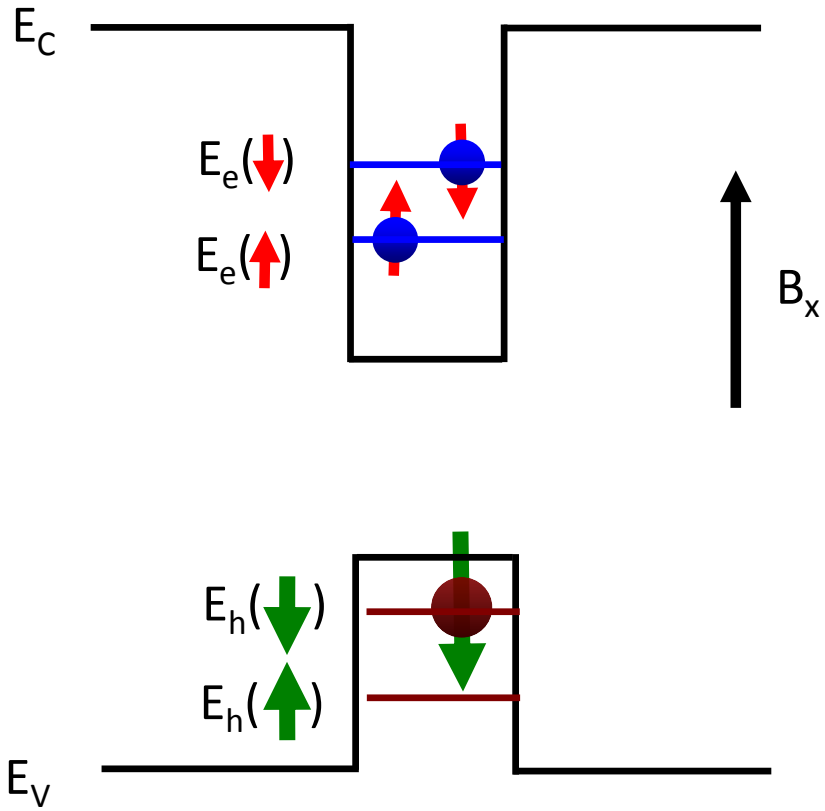

Selection rules

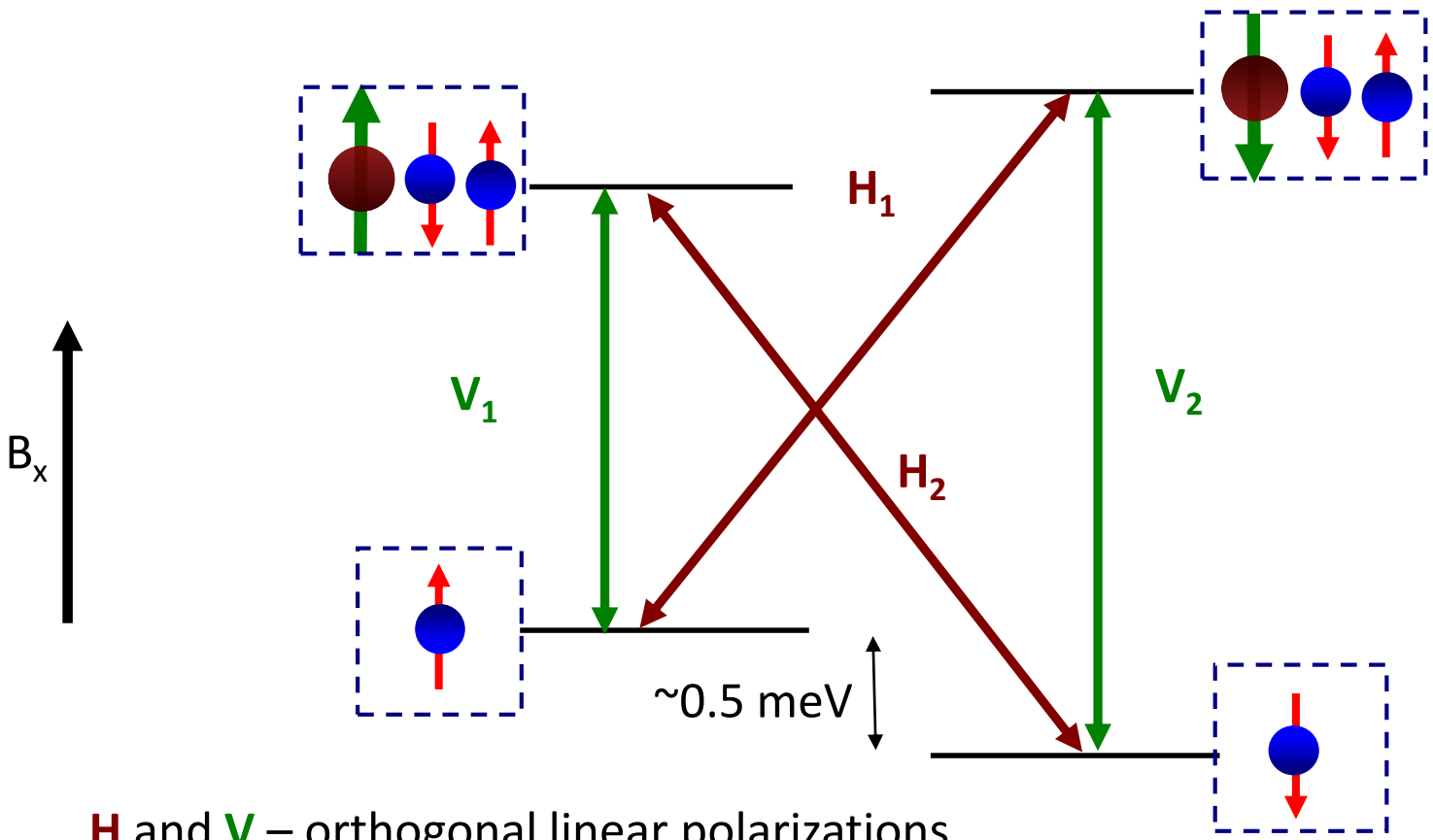

H and **V** – orthogonal linear polarizations

Different states can be coupled using polarization and frequency selection.

Setup

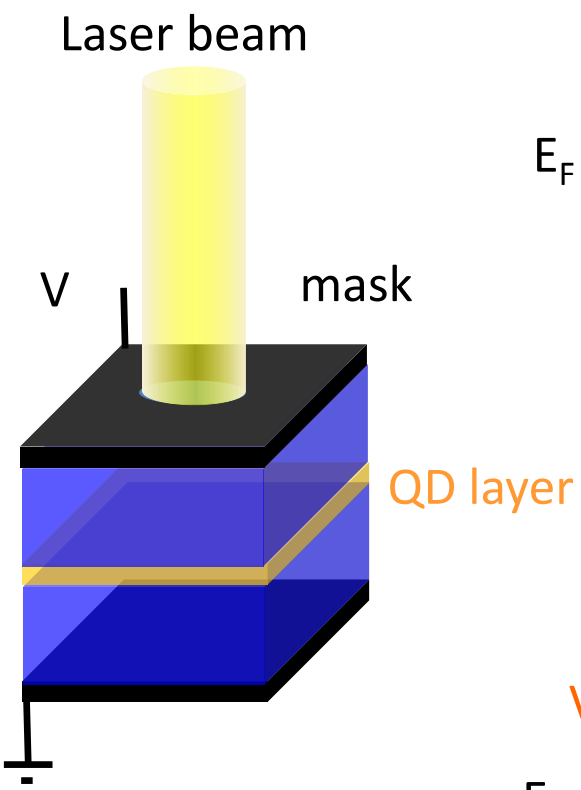
Laser beam
V
mask
QD layer

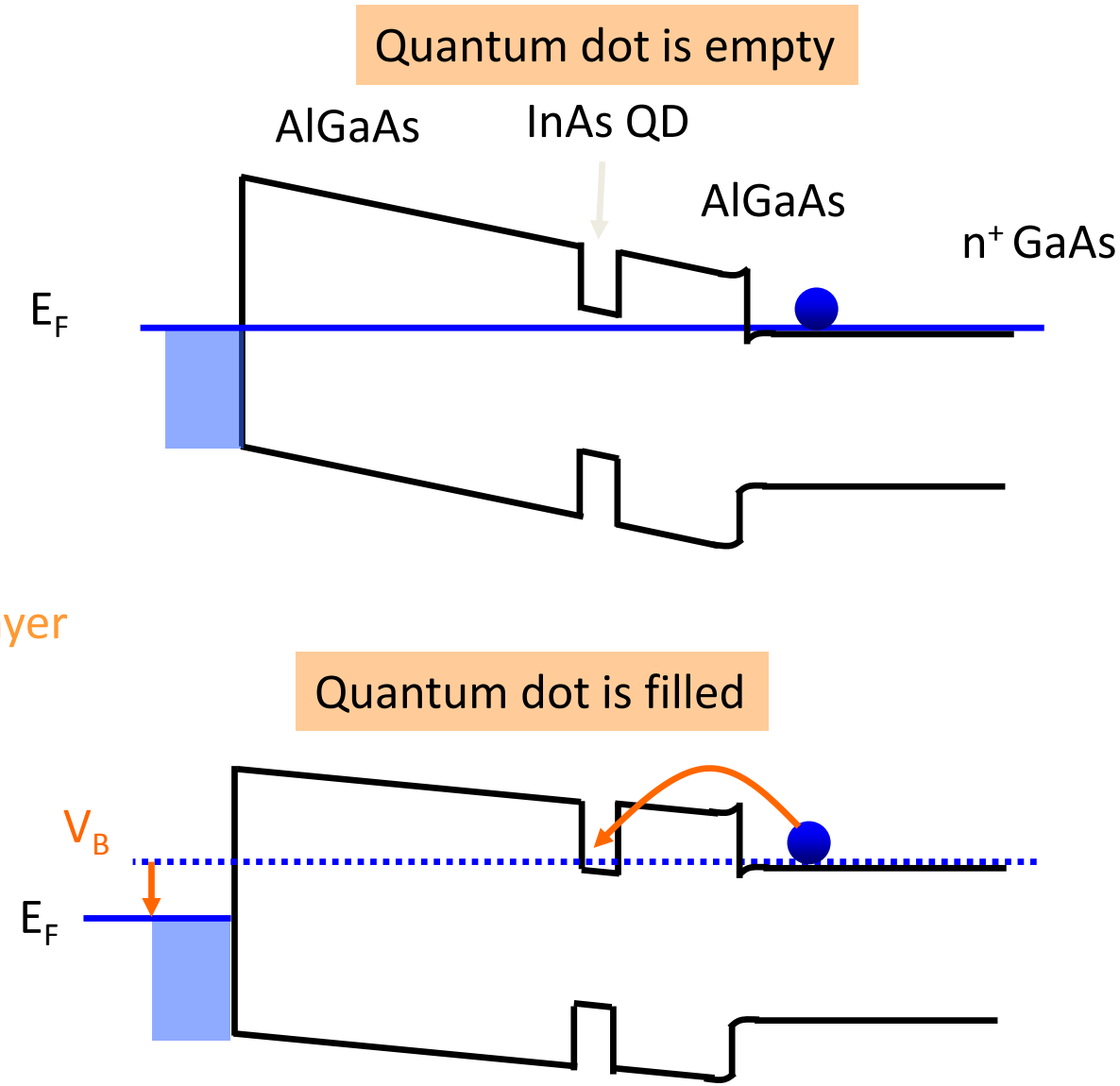
Quantum dot is empty
AlGaAs
InAs QD
AlGaAs
n+ GaAs
EF
Quantum dot is filled
VB
EF

Charges in single QDs

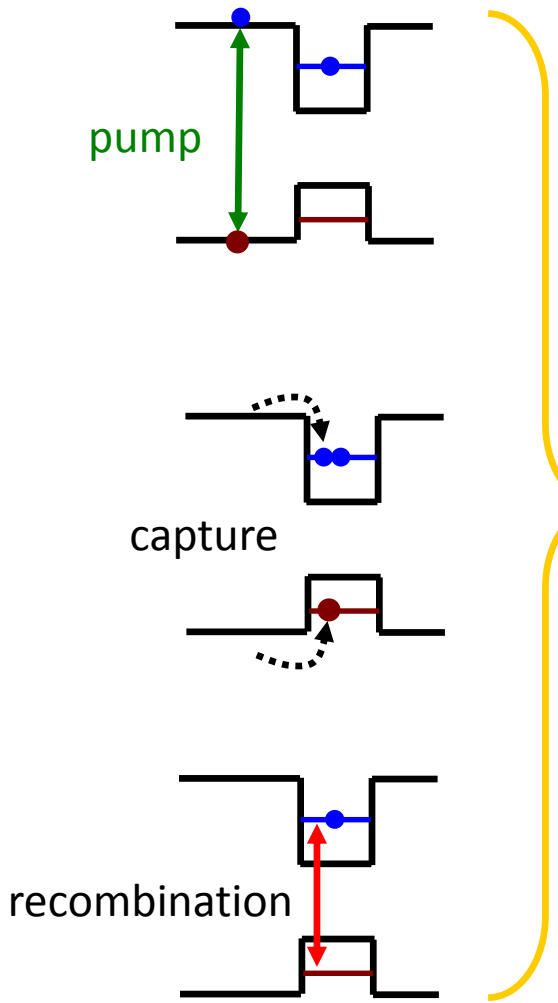

Photoluminescence

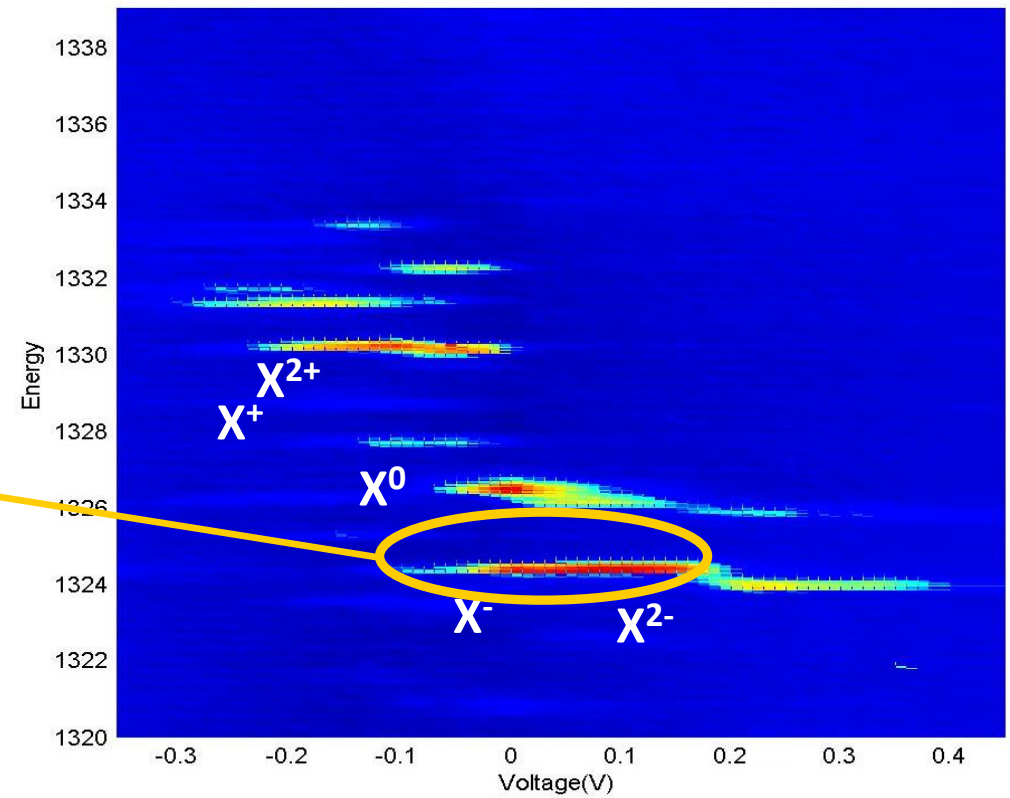

X. Xu, *et. al.,* PRL **99**, 097401 (2007)

Fast initialization

Whenever an electron is in the state flip it to the state.

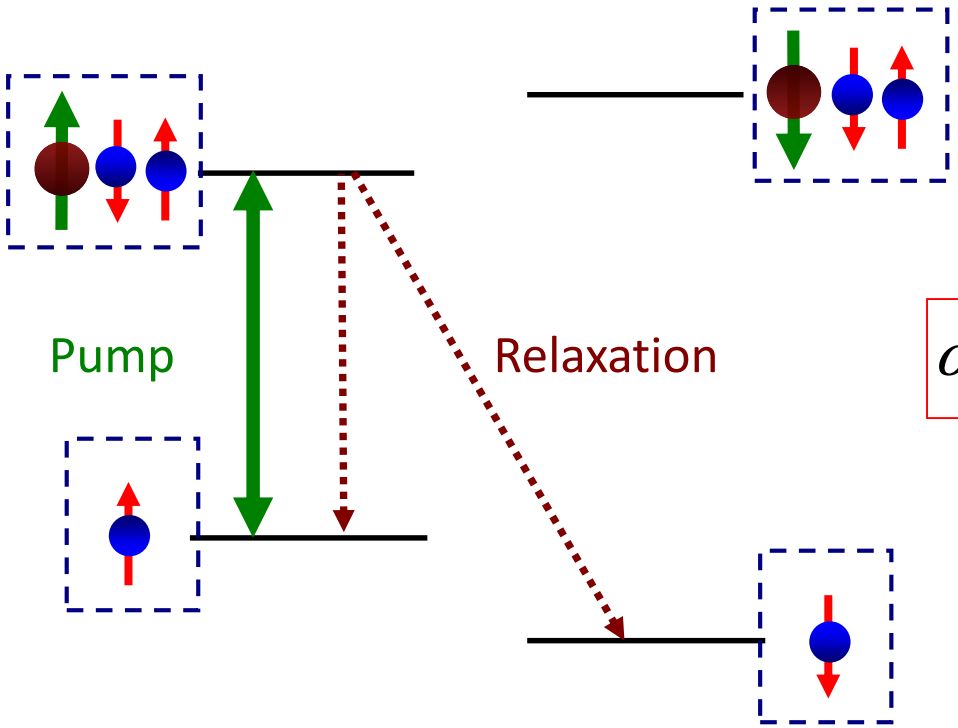

$$\alpha|\uparrow\rangle + \beta|\downarrow\rangle \Rightarrow |\downarrow\rangle$$

C. Emary, et. al. Phys. Rev. Lett. 98, 047401 (2007)

Pump-probe of initialization

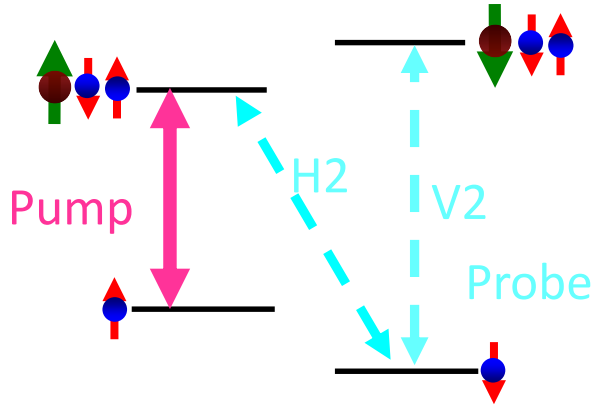

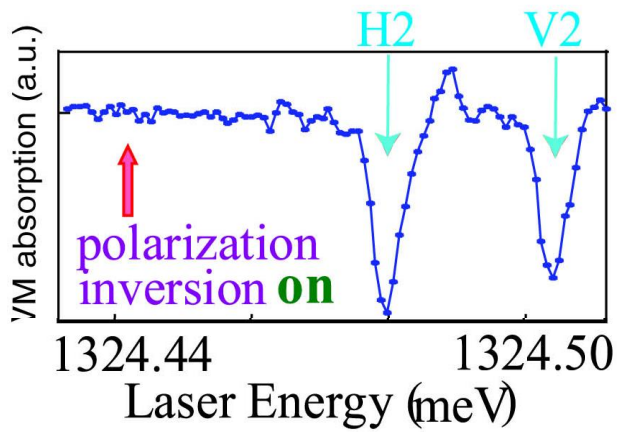

State preparation efficiency 98.9%

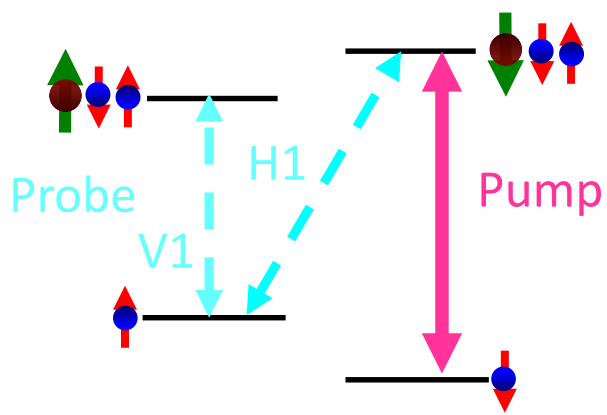

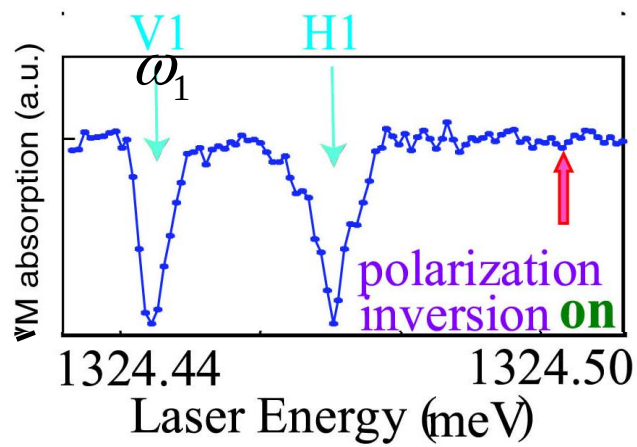

D. Steel, U. Michigan
D. Gammon, NRL

X. Xu, *et. al.*, PRL **99**, 097401 (2007)

Single qubit phase gate

Phase: $\varphi_1 \propto \frac{V^2}{\delta_1} t_{pulse}$

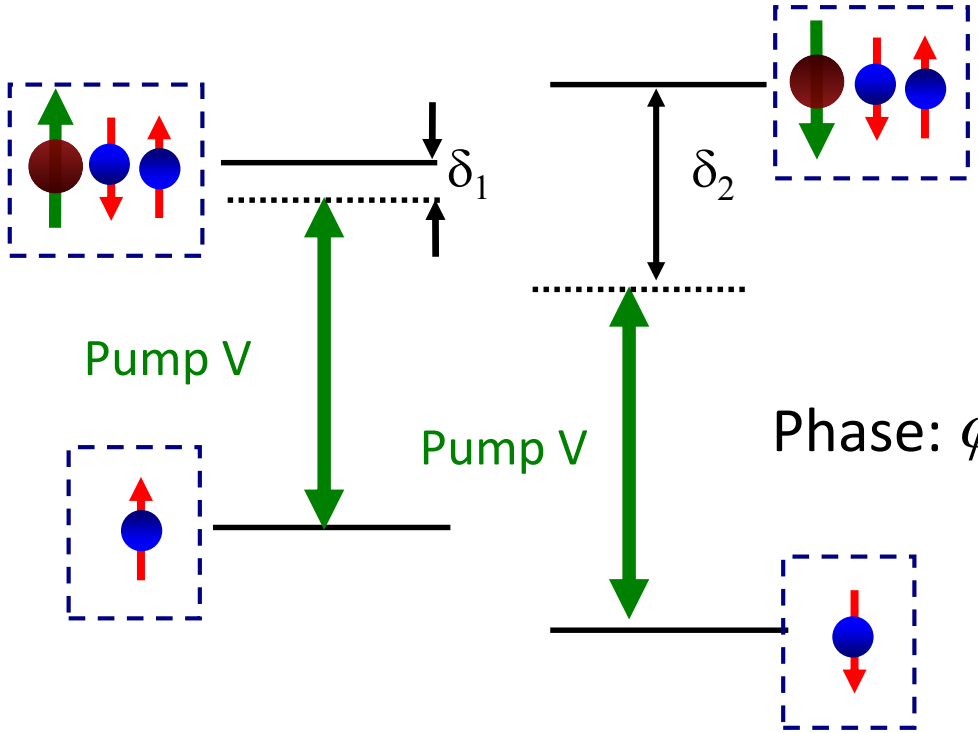

Phase: $\varphi_2 \propto \frac{V^2}{\delta_2} t_{pulse}$

$$H_{gate} = \begin{pmatrix} -\frac{V^2}{\delta_1} & 0 \\ 0 & -\frac{V^2}{\delta_2} \end{pmatrix}$$

$$\boxed{\alpha|\uparrow\rangle + \beta|\downarrow\rangle \Rightarrow \alpha e^{-i\varphi_1}|\uparrow\rangle + \beta e^{-i\varphi_2}|\downarrow\rangle}$$

Single qubit operations

Use frequency and polarization selection

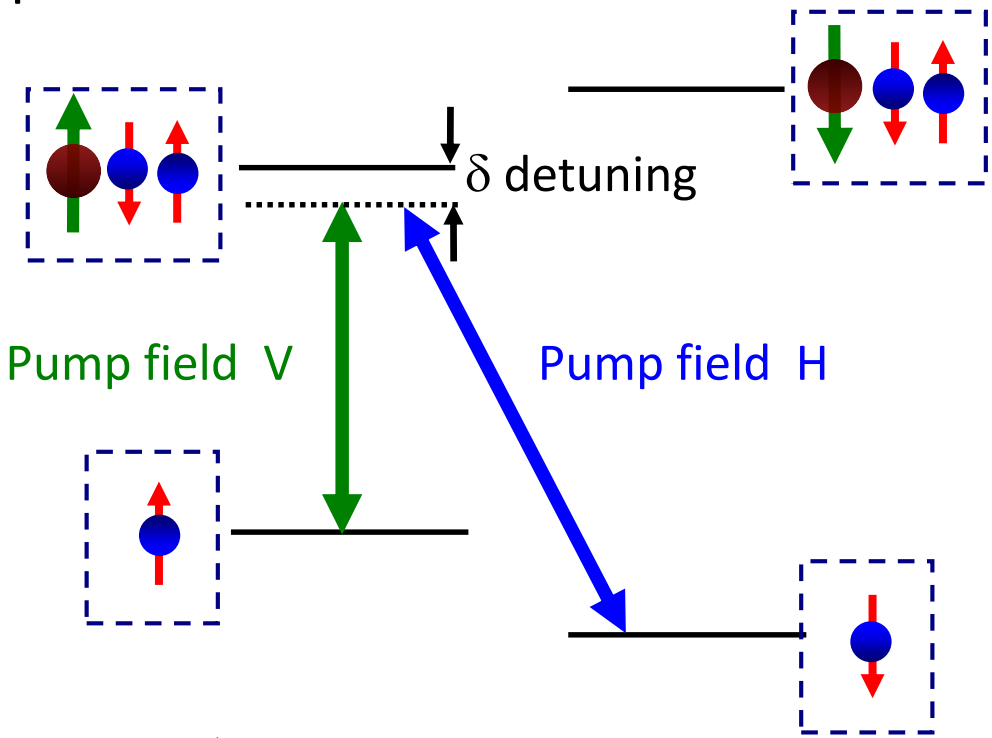

$$H_{gate} = \begin{pmatrix} 0 & -\frac{VH}{\delta} \\ -\frac{VH}{\delta} & 0 \end{pmatrix}$$

Single qubit operations: experiment

Rabi oscillations

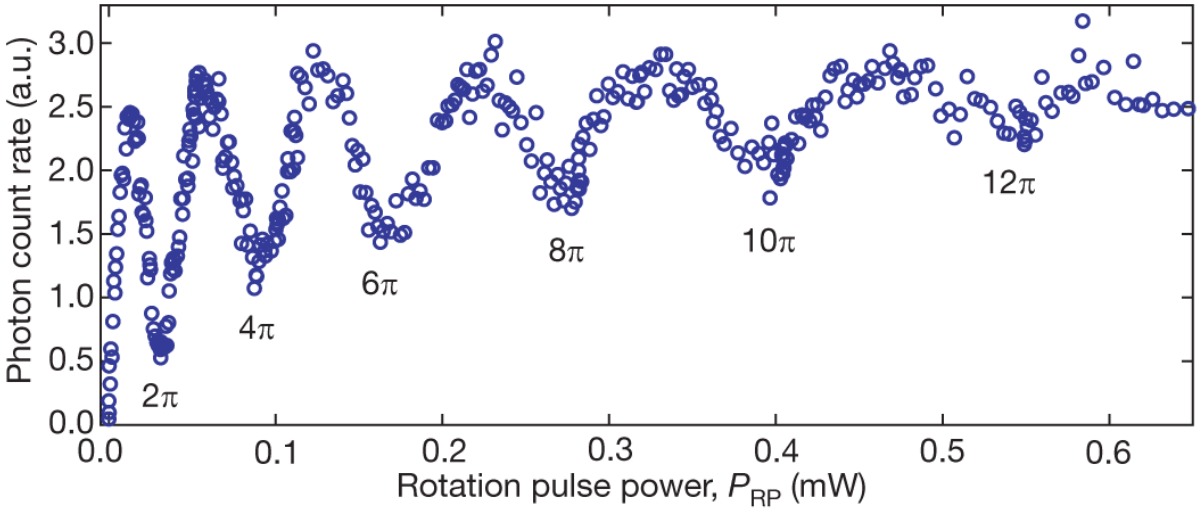

Ramsey fringes

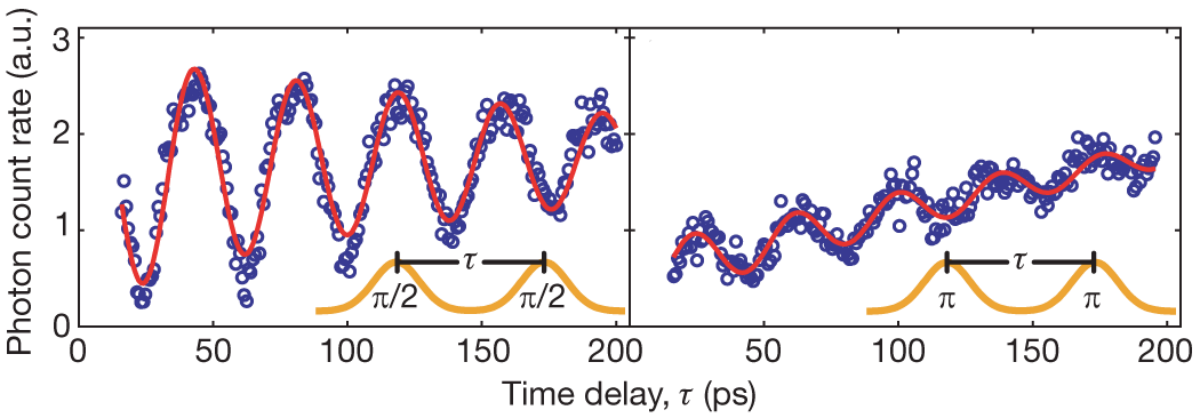

D. Press, et. al. Nature 456, 218 (2008)

Two-qubit systems: conditional phase gate

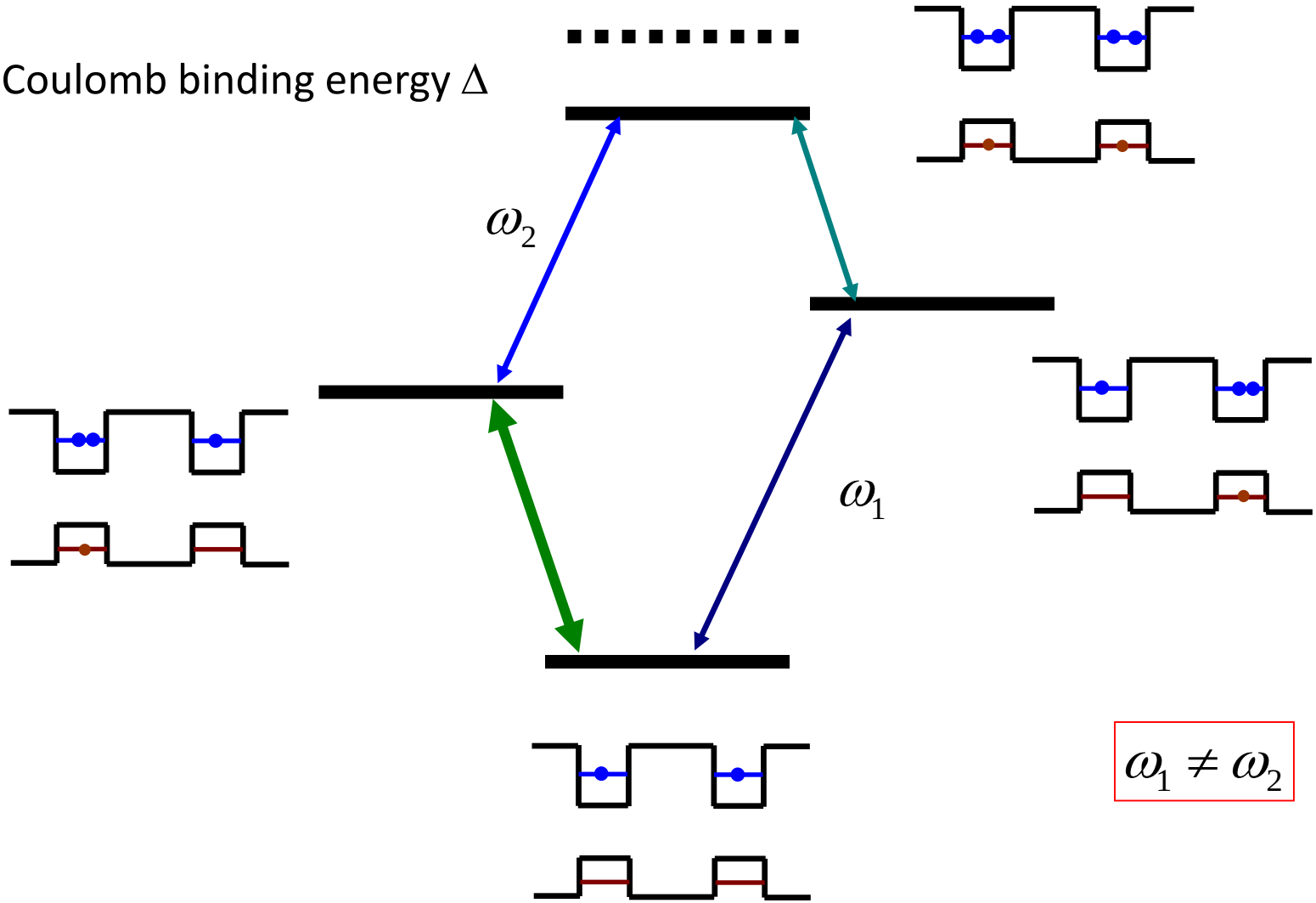

$\omega_1 \neq \omega_2$

Two-qubit systems: SWAP gate

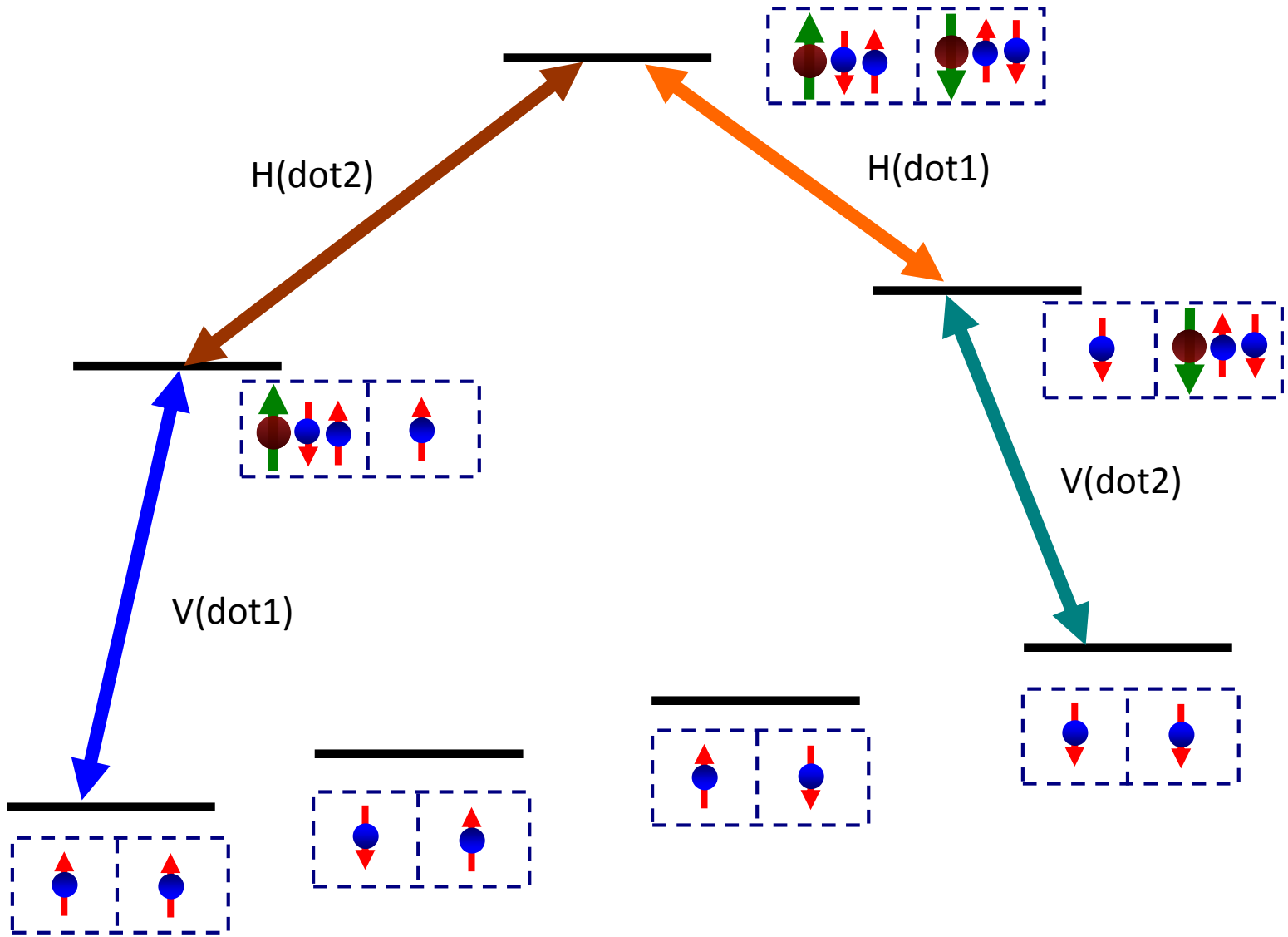

- Frequency and polarization selection of a particular coupling

Adiabatic SWAP gate

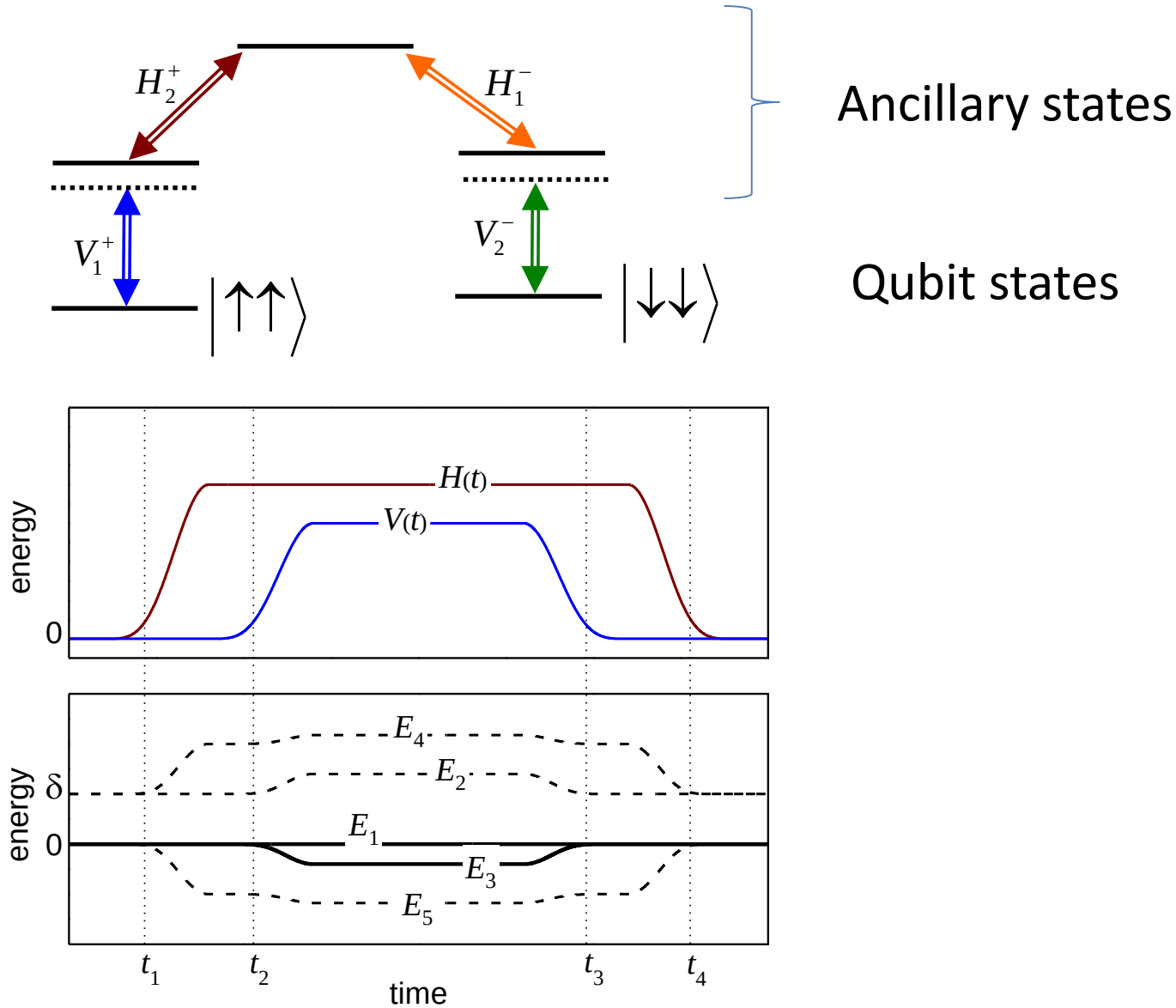

S.K.Saikin, et. al. PRB 78, 235314 (2008)

Two-qubit hybrid SWAP gate

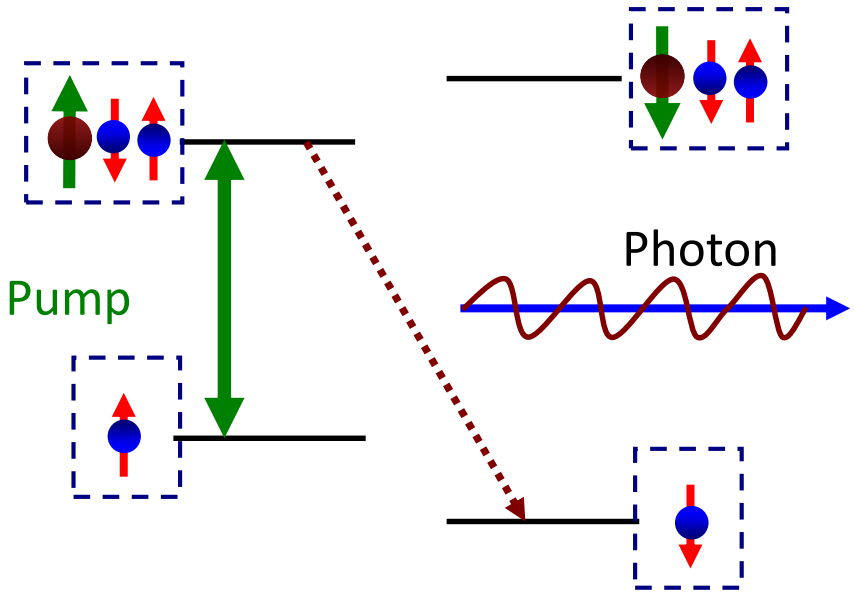

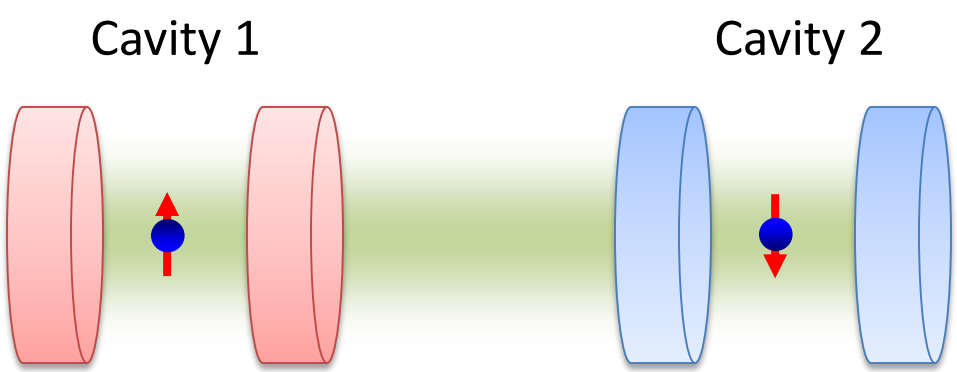

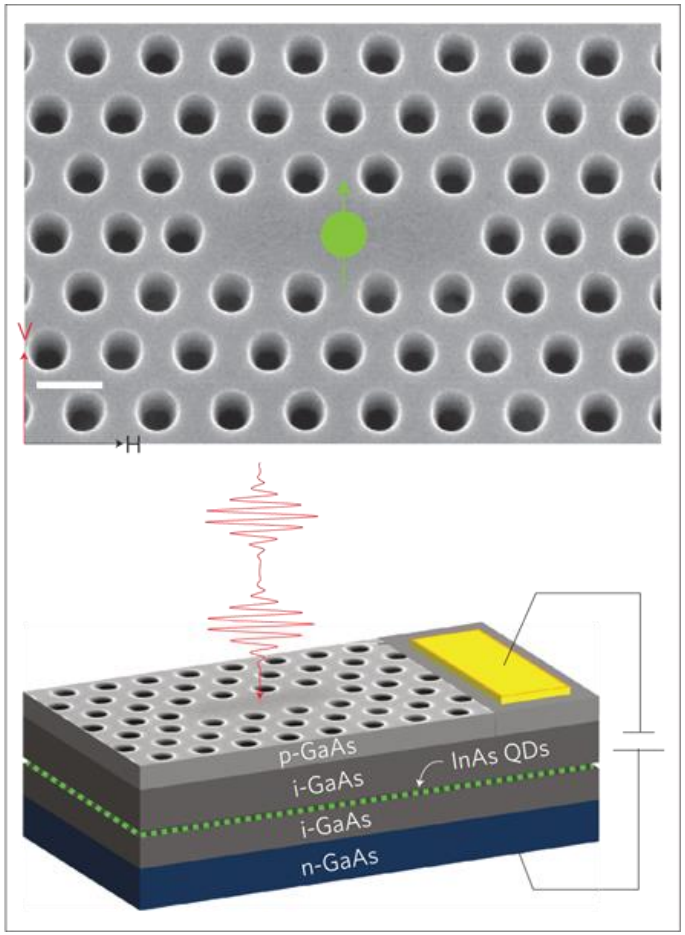

S. G. Carter, et. al. Nature Photonics 7, 329 (2013)

Requirements for qubits

- Ability to scale the architecture to a large number of qubits.
- Initialization (set all qubits to 0) should be possible.
- Precise single and two-qubits quantum operations.
- Slow error rate (slow decoherence as compared to gate time).
- Reliable output of the final result.

Scaling of qubit systems

$$H_{ex} = \mathbf{S}_1 \mathbf{J}(E) \mathbf{S}_2$$

$$\mathbf{J}(E) \propto e^{-\alpha R_{12}}$$

Gate interaction is very sensitive to the relative position of qubits

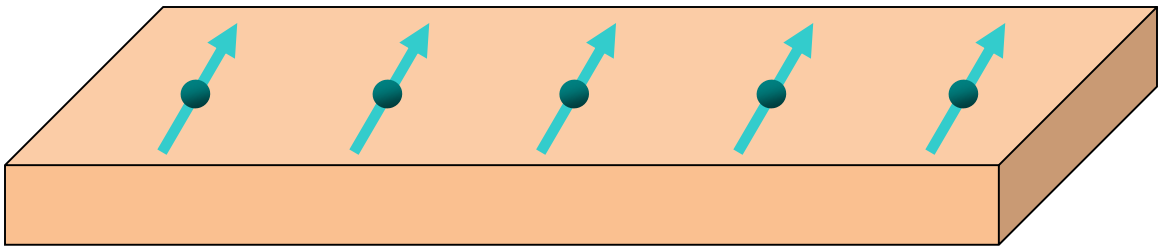

$$H_{dipole} = \mathbf{S}_1 D \mathbf{S}_2$$

$$\mathbf{D} \propto R_{12}^{-3}$$

Long-range interaction between qubits

- Two-qubit gates are for nearest neighbors only
- Some implementations, e.g. nuclear spins in molecules or ions in e/m traps, may have natural limitations in scaling
- Hybrid systems with different types of qubits, e.g. spins and photons, should be used

Initialization/redout

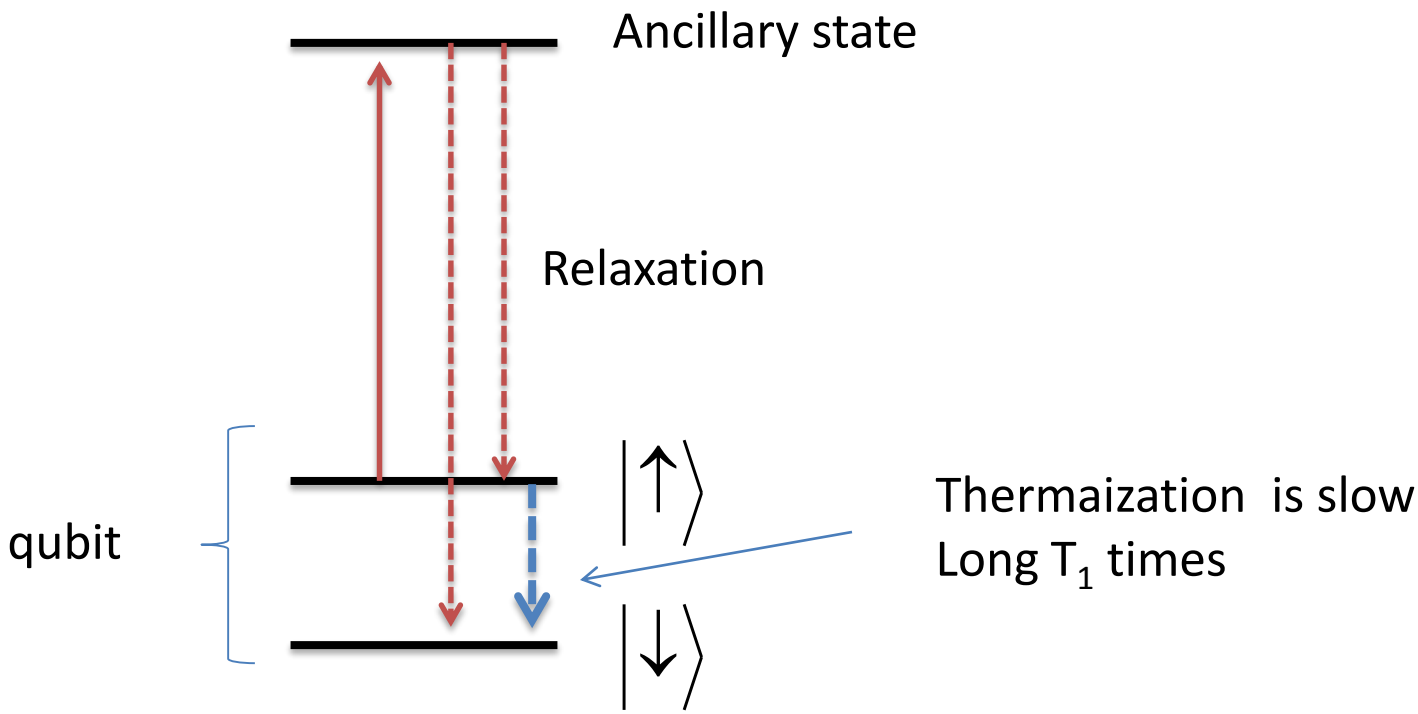

- Requires fast operations between qubit and ancillary states.

Precise and fast operations

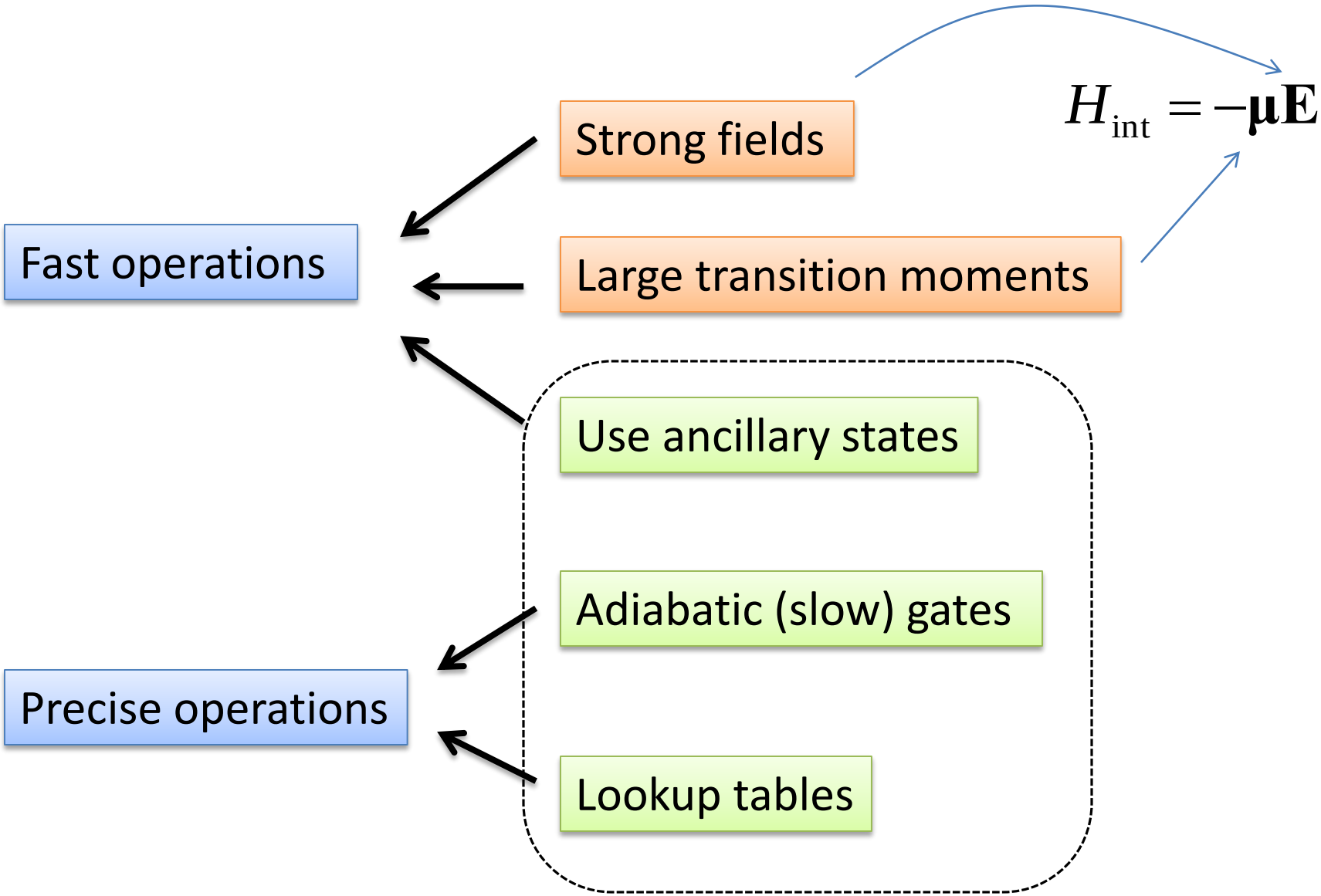

Decoherence

System + Bath = Closed quantum system

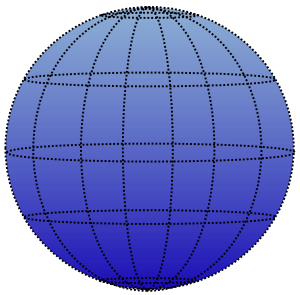

Phonons,
Photons,
Electrons,
Spins…

Space available for the qubit evolution

System is entangled with the bath

<u>No-relaxation model</u>

$$|\Psi(0)\rangle = \left(\alpha|\uparrow\rangle + \beta|\downarrow\rangle\right)|J\rangle \longrightarrow |\Psi(t)\rangle = \alpha(t)|\uparrow\rangle|J_\uparrow\rangle + \beta(t)|\downarrow\rangle|J_\downarrow\rangle$$

system bath

$$\rho = \begin{pmatrix} |\alpha(t)|^2 \langle J_\uparrow|J_\uparrow\rangle & \alpha(t)\beta^*(t)\langle J_\downarrow|J_\uparrow\rangle \\ \beta(t)\alpha^*(t)\langle J_\uparrow|J_\downarrow\rangle & |\beta(t)|^2 \langle J_\downarrow|J_\downarrow\rangle \end{pmatrix}$$