# Problems of Modern Physics

## Lecture 3

Semion K. Saikin
Department of Chemistry and Chemical Biology
Harvard University

Email: saykin@fas.harvard.edu

# Physical realization of qubits

# Hardware

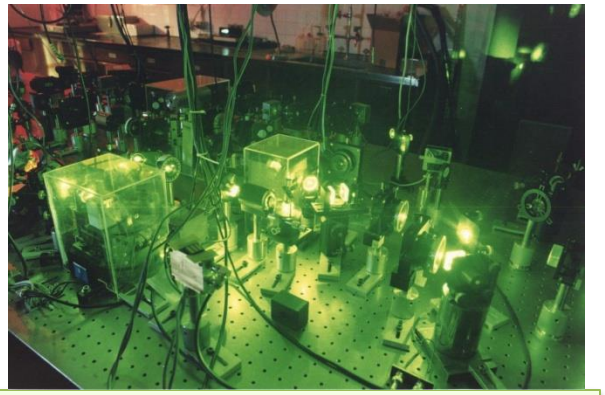

quantum optics

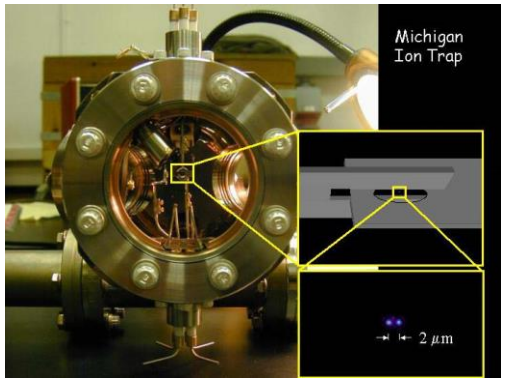


trapped ions

nuclear magnetic resonance

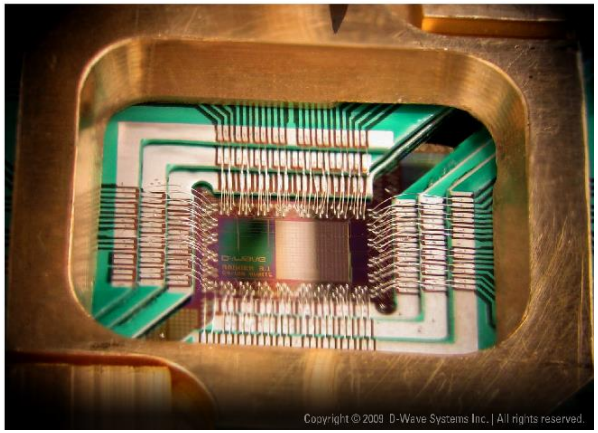


superconducting loops

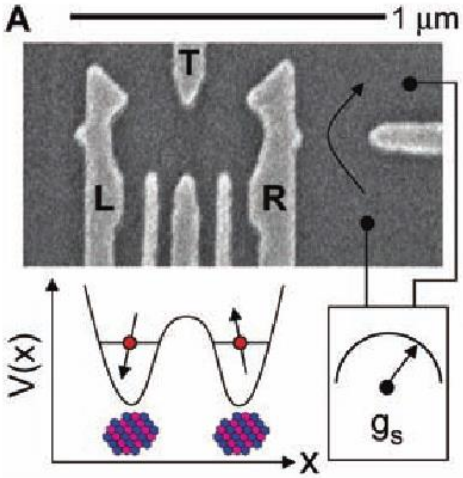


semiconductor quantum dots

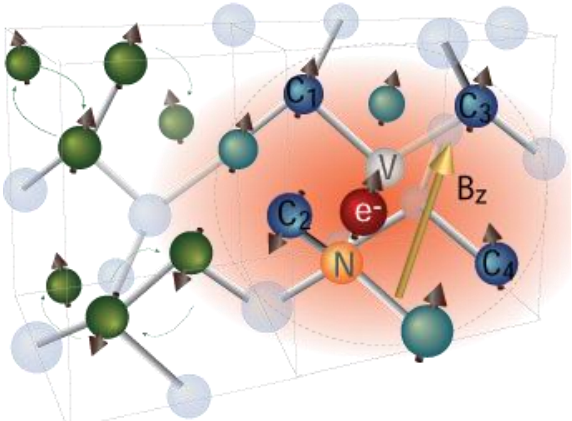


nitrogen vacancies in diamond

# Requirements for qubits

- Ability to scale the architecture to a large number of qubits.
- Initialization (set all qubits to 0) should be possible.
- Precise single and two-qubits quantum operations.
- Slow error rate (slow decoherence as compared to gate time).
- Reliable output of the final result.

# Effective two-level systems

## Spin 1/2 states

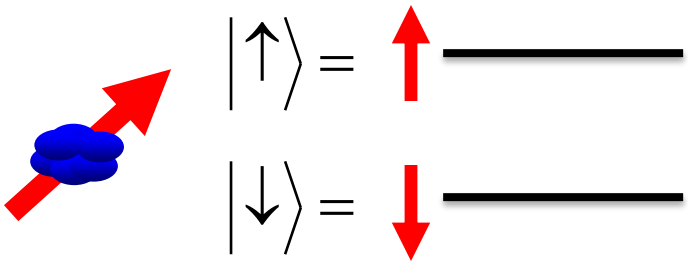

$$|\uparrow\rangle =$$

$$|\downarrow\rangle =$$

## Light polarization

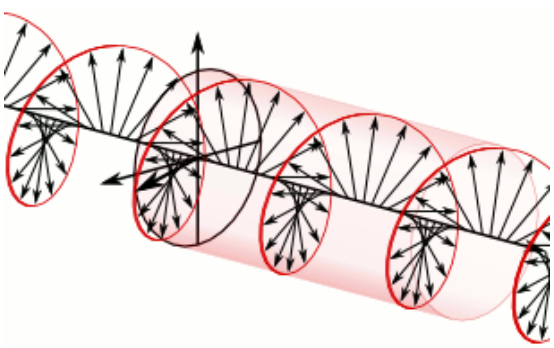

$$|\uparrow\rangle = |+\rangle$$

$$|\downarrow\rangle = |-\rangle$$

http://commons.wikimedia.org/wiki/File:Circular.Polarization.Circularly.Polarized.Light_Left.Hand.Animation.305x190.255Colors.gif

## Energy levels in an anharmonic potential

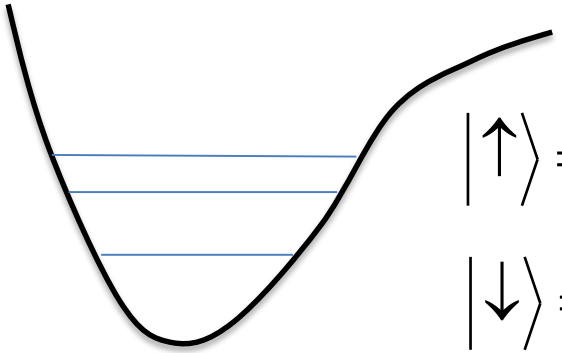

$$|\uparrow\rangle = |e_2\rangle$$

$$|\downarrow\rangle = |e_1\rangle$$

## ~~Harmonic potential~~

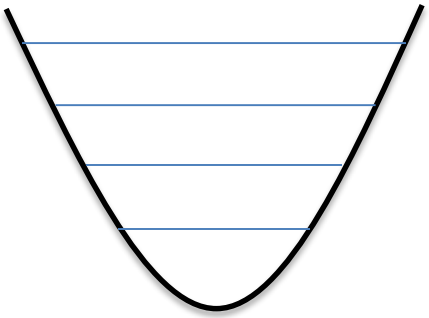

# Impurity spins

$^{31}$P electron spin
(T=4.2K)
$T_1$~ min  $T_2$~ msecs

Diamond crystal structure

P atom
(group-V)

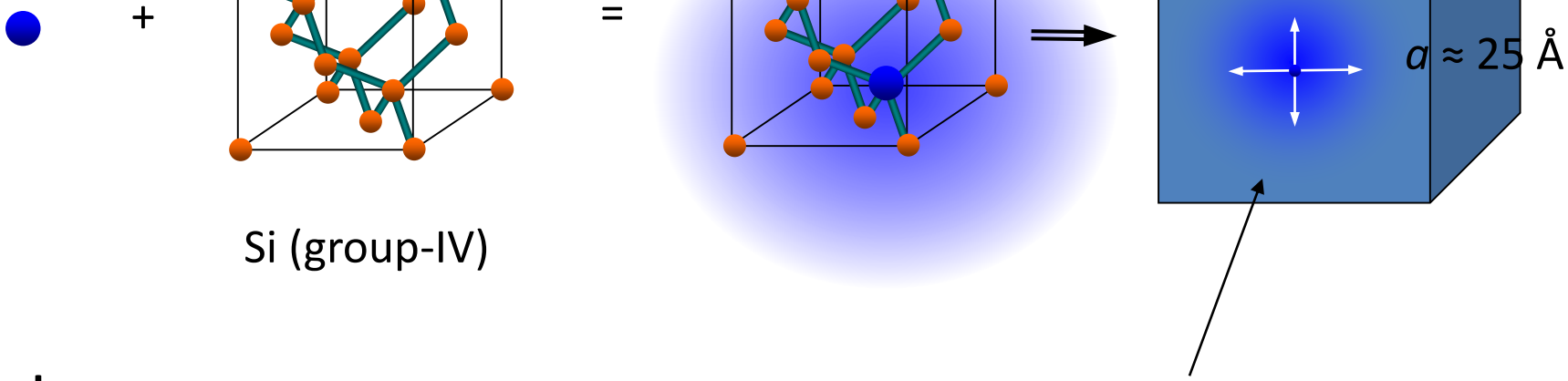


Si (group-IV)

**Natural Phosphorus:**
$^{31}$P – 100%
I=1/2

Electron wave function: $F(\mathbf{r}) = \frac{1}{\sqrt{\pi ab}} e^{-\sqrt{(x^2+y^2)/a^2+z^2/b^2}}$

# Nuclear spin qubits: model

**$^{31}$P donor**
qubit – nuclear spin
qubit-qubit interaction – electron spin

B.E.Kane, Nature **393** 133 (1998)

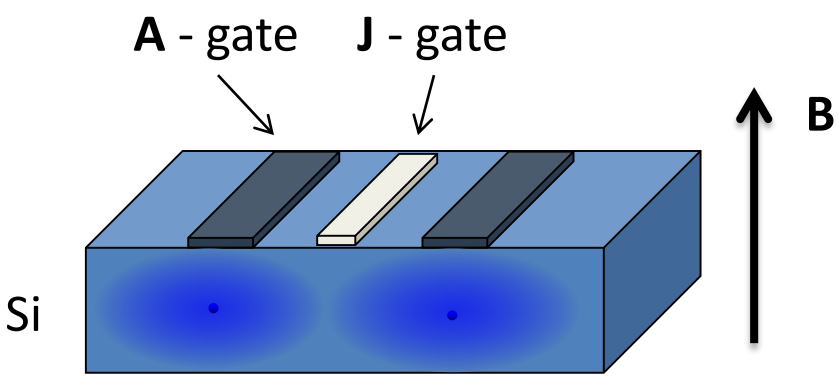


$$H_{ex} = \mathbf{S}_1 \mathbf{J}(E) \mathbf{S}_2$$

$$H_{hf} = \mathbf{S}_1 \mathbf{A}(E) \mathbf{I}_1$$

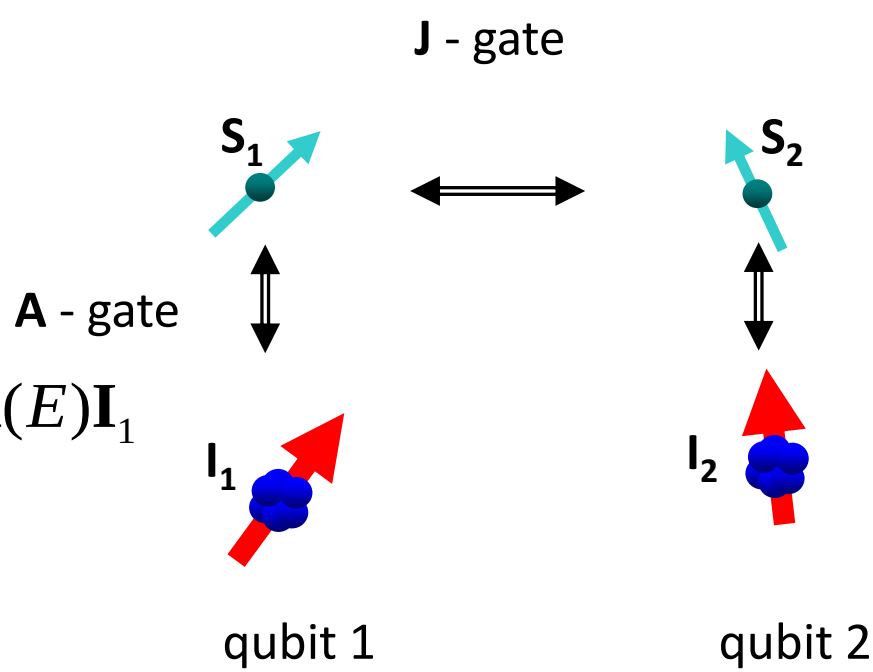

# Electron spin qubits: model

**$^{31}$P donor**
Qubit – electron spin
Qubit-qubit inteaction – electron spin

R.Vrijen, et. al.,
Phys. Rev. A **62**, 012306 (2000)

$Si_xGe_{1-x}$

$Si_{1-x}Ge_x$

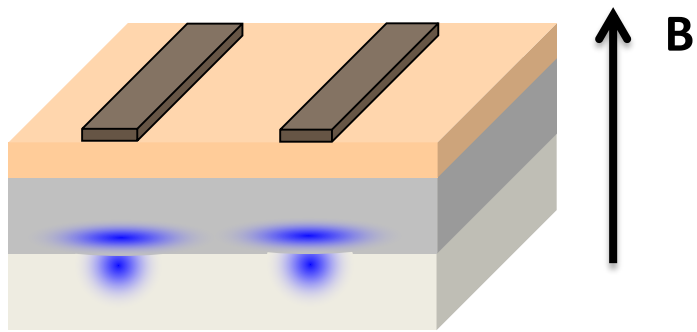


$$H_{ex} = \mathbf{S}_1 \mathbf{J}(E) \mathbf{S}_2$$

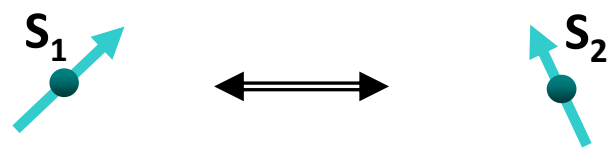


qubit 1 qubit 2

Bohr Radius:
**Si:** $a \approx 25$ Å
$b \approx 15$ Å

**Ge:** $a \approx 64$ Å
$b \approx 24$ Å

# Nuclear spin qubits: initialization

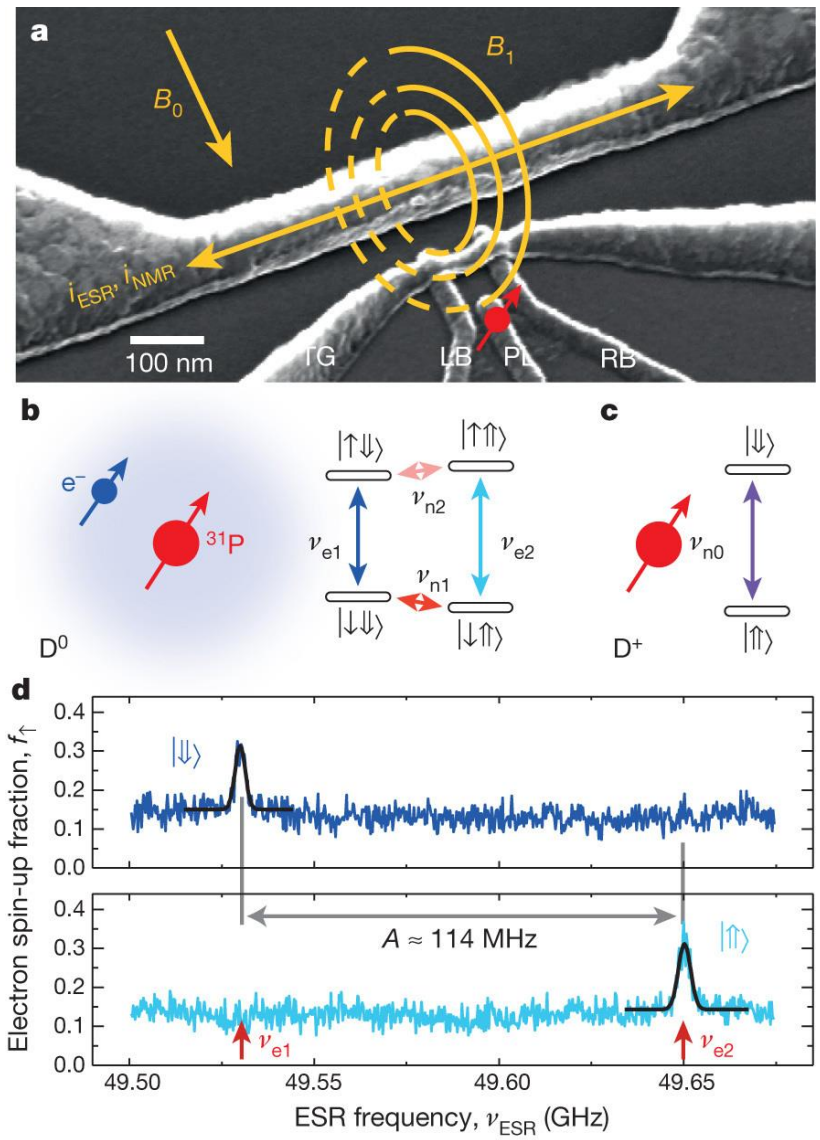


$T$ = 300 mK
$B_0$ ~ 1 T

J. J. Pla, et. al., Nature **496**, 334 (2013)

# Nuclear spin qubits: Rabi oscillations

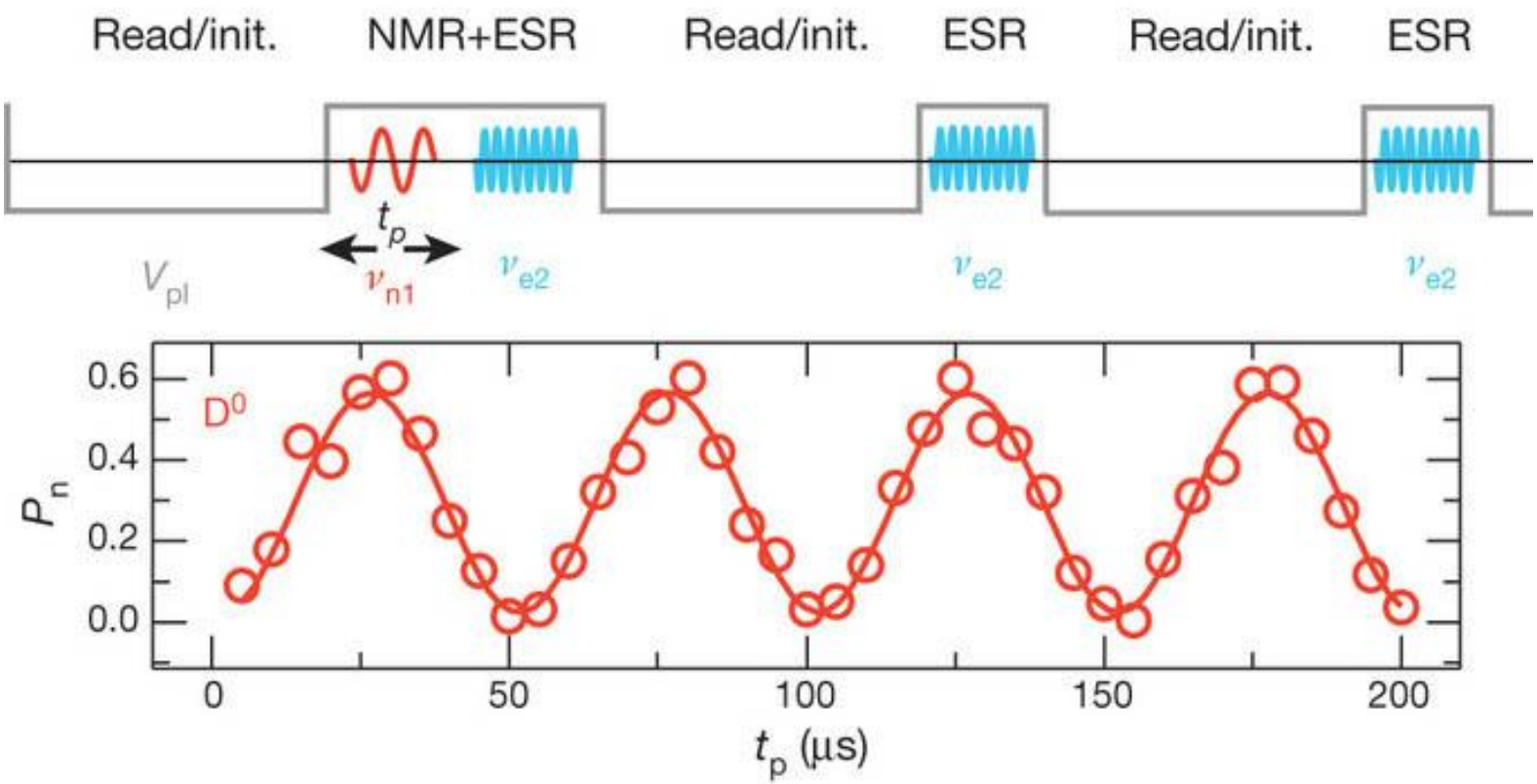


J. J. Pla, et. al., Nature **496**, 334 (2013)

# Nuclear spin qubits: Ramsey fringes

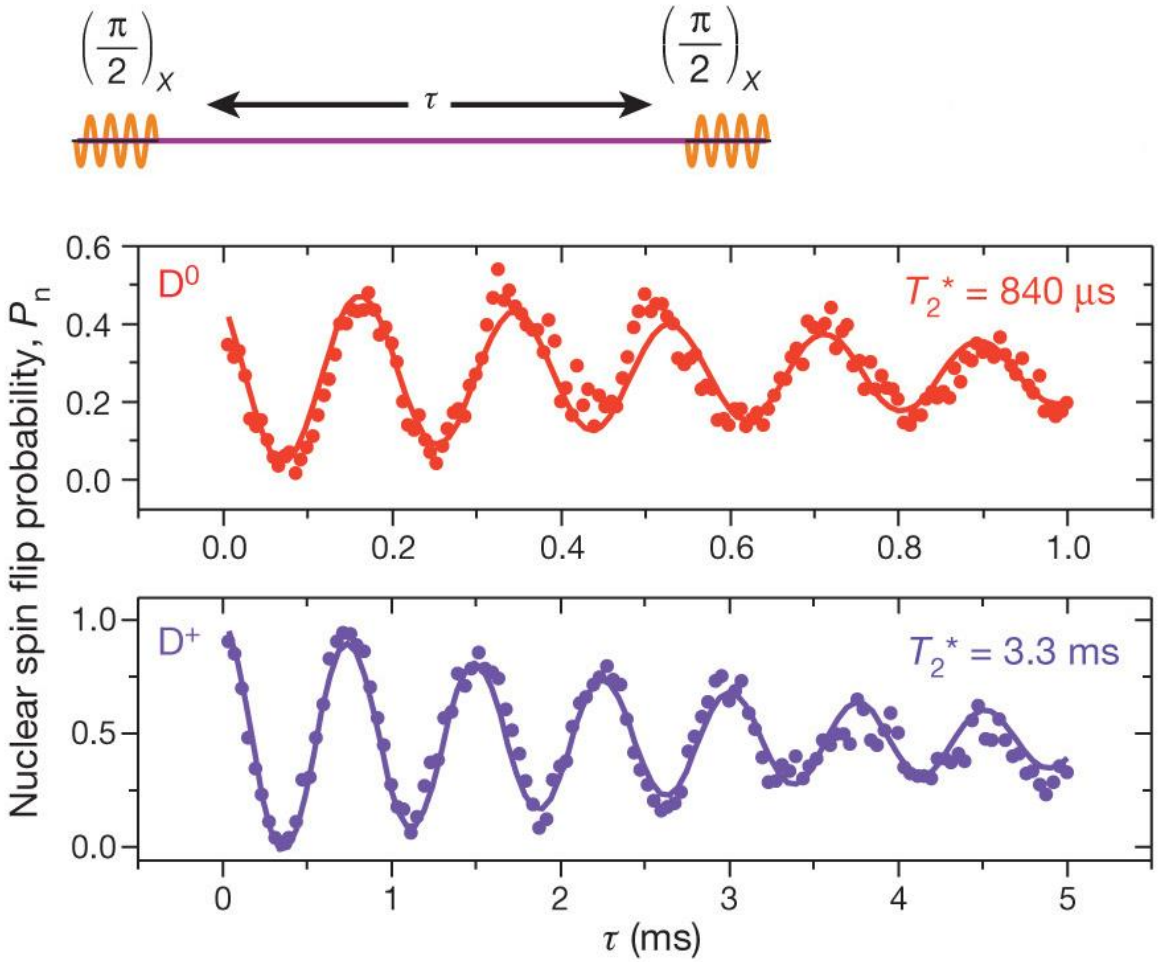


J. J. Pla, et. al., Nature **496**, 334 (2013)

# Electron spin in N-V$^-$ centers

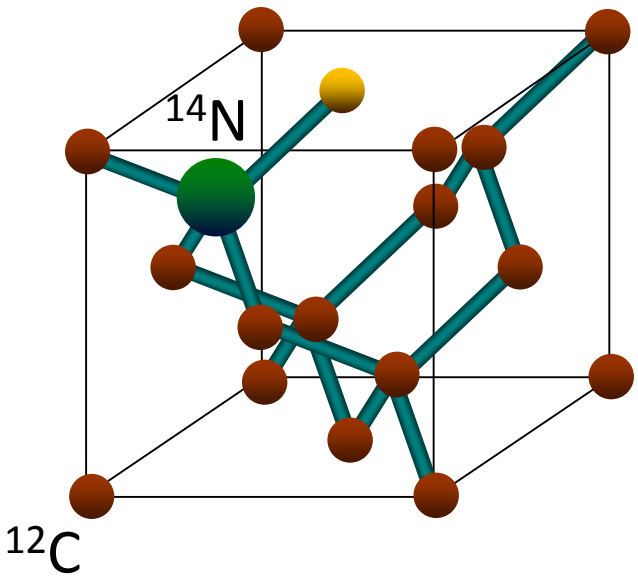


C (group IV)

N (group V)

Energy level structure

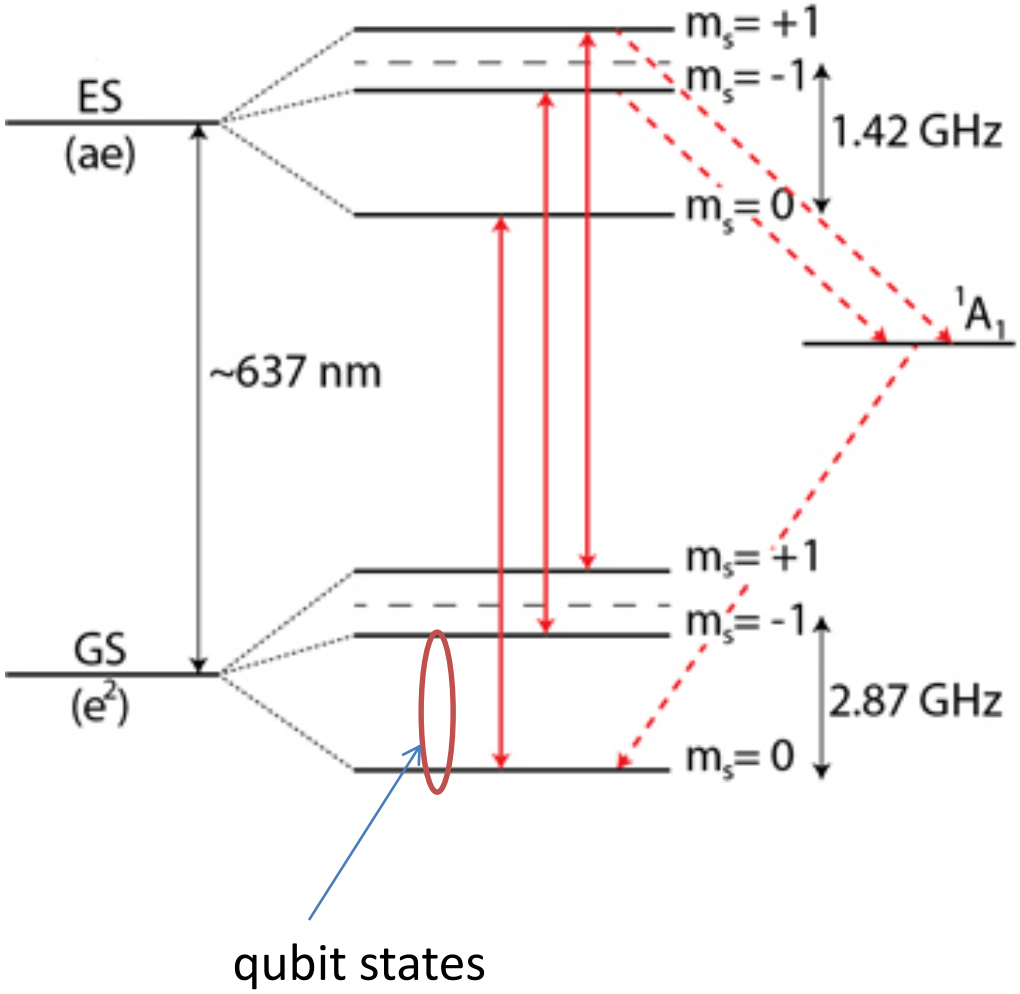

# Semiconductor quantum dots

## Gated QD

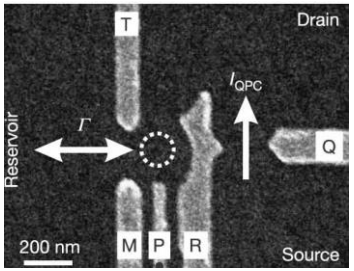


Elzerman et al.
Nature **430**, 431(2004)

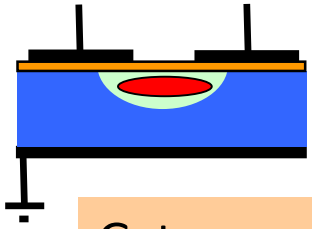

Gate depletion

## Interface fluctuation QDs

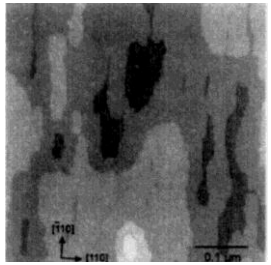

D.Gammon, *et al.*,
PRL **76,** 3005 (1996)

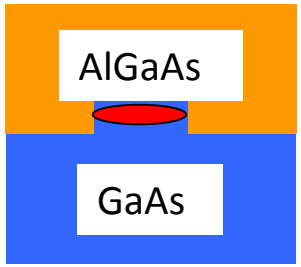


Interface imperfections

## Self-assembled dots

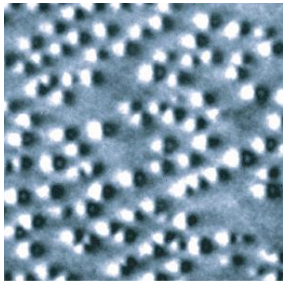

NIST website

0.1 μm

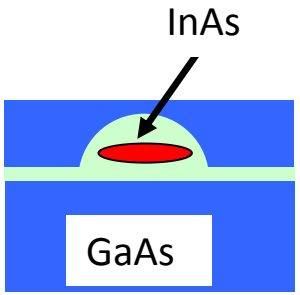


Lattice mismatch

# QDs: energy level structure

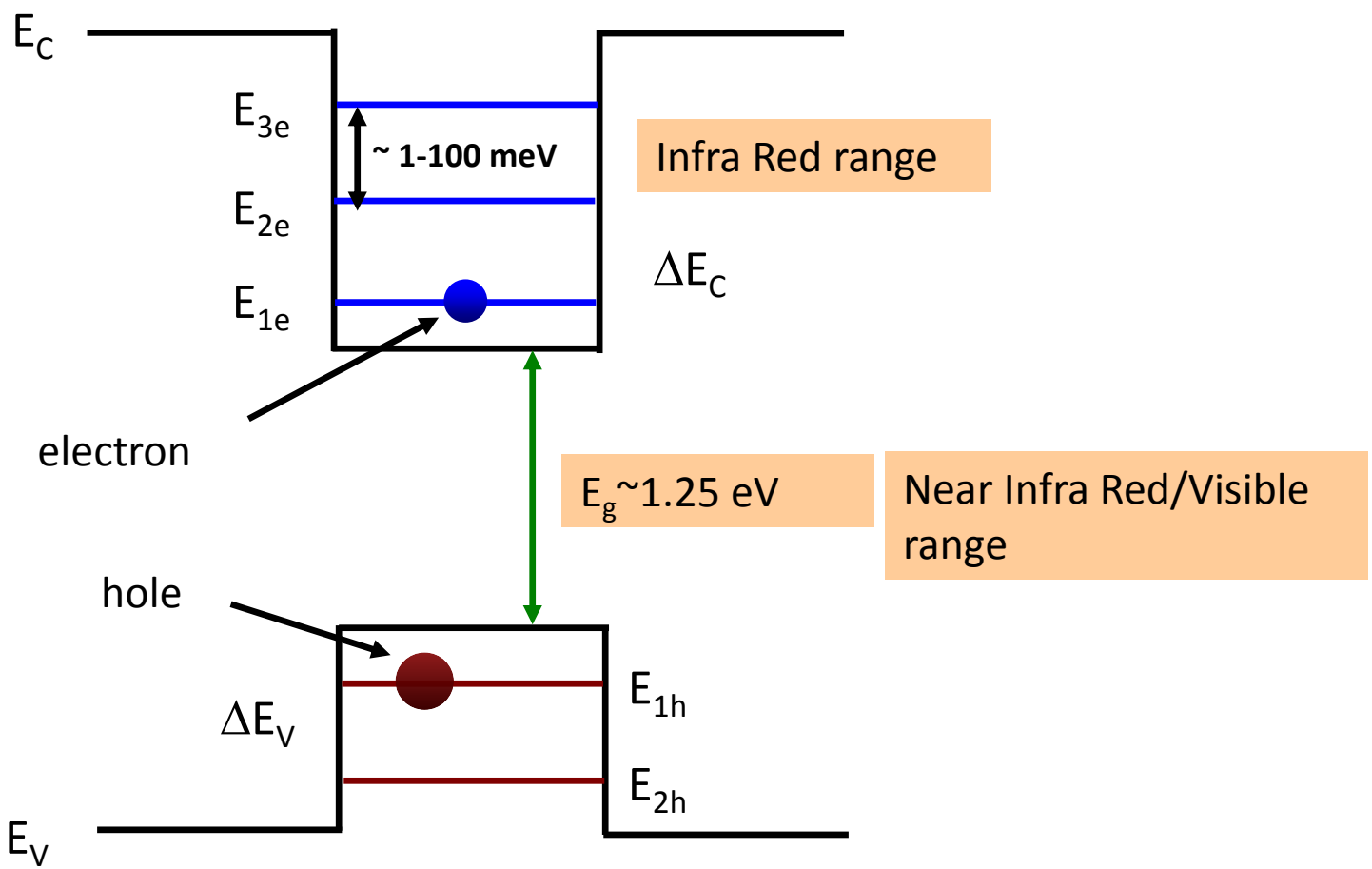


Spacing between the energy levels can be controlled using different materials or by design.

# Few charge carriers

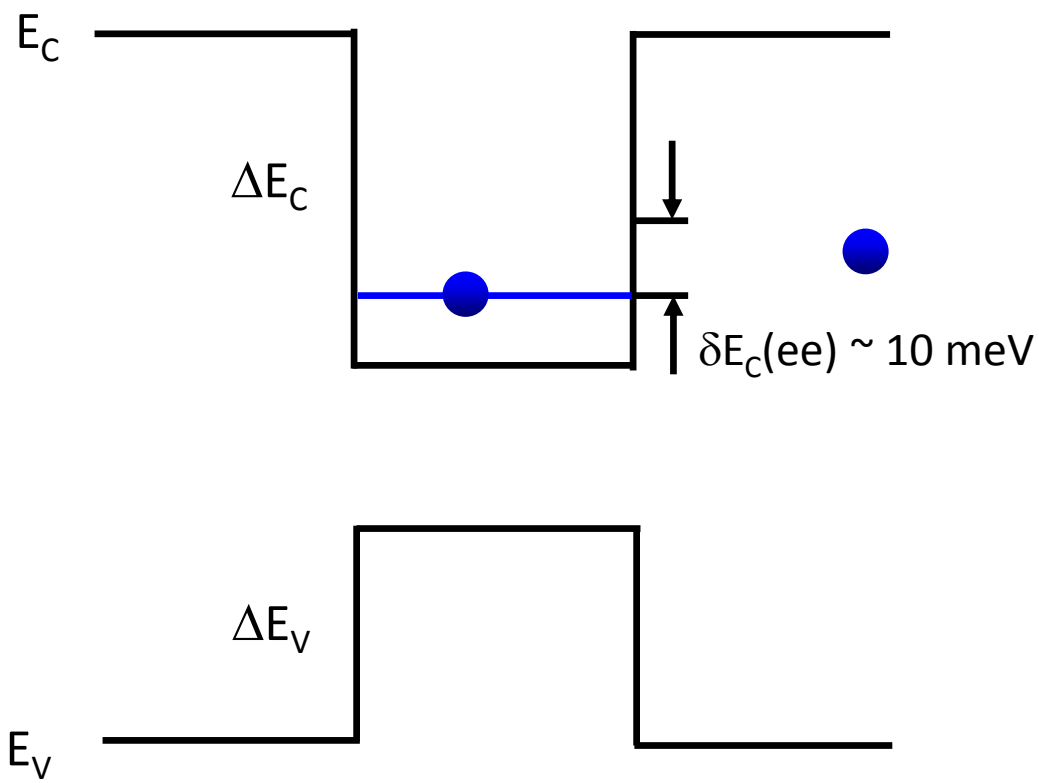

# Spin states

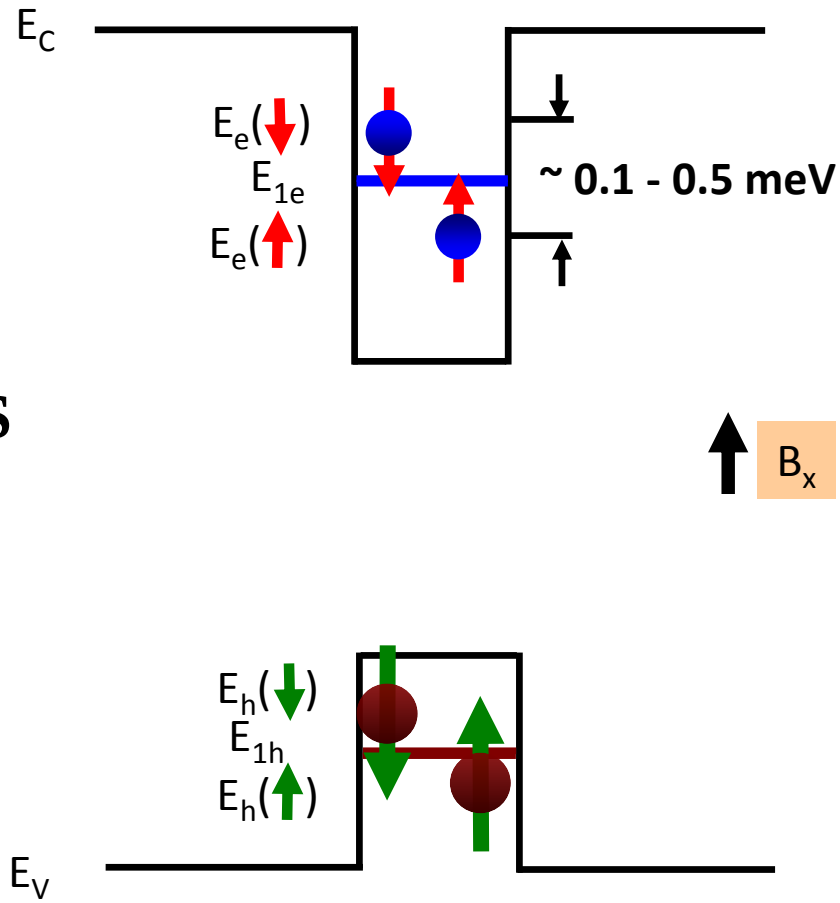


$$\boldsymbol{\mu} = -g\mu_B \mathbf{S}$$

$$H = -\boldsymbol{\mu}\mathbf{B}$$

Low temperature: $T_{relax}$ ~ 10 ms, $T_{deph}$ ~ 10 μs

Room temperature: $T_{relax} \geq 1$ ns, $T_{deph} \geq 0.1$ ns (lower boundary)

# Coupling with light: empty QDs

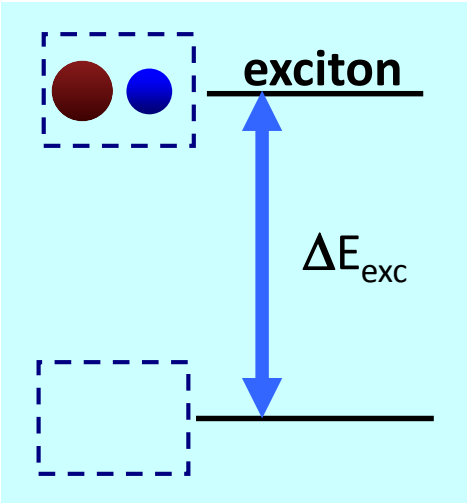


Photon $h\nu = \Delta E_{exc}$

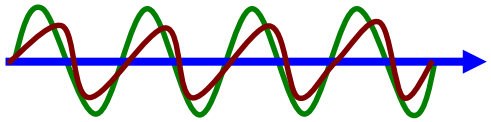

Exciton relaxation time ~ 1 ns

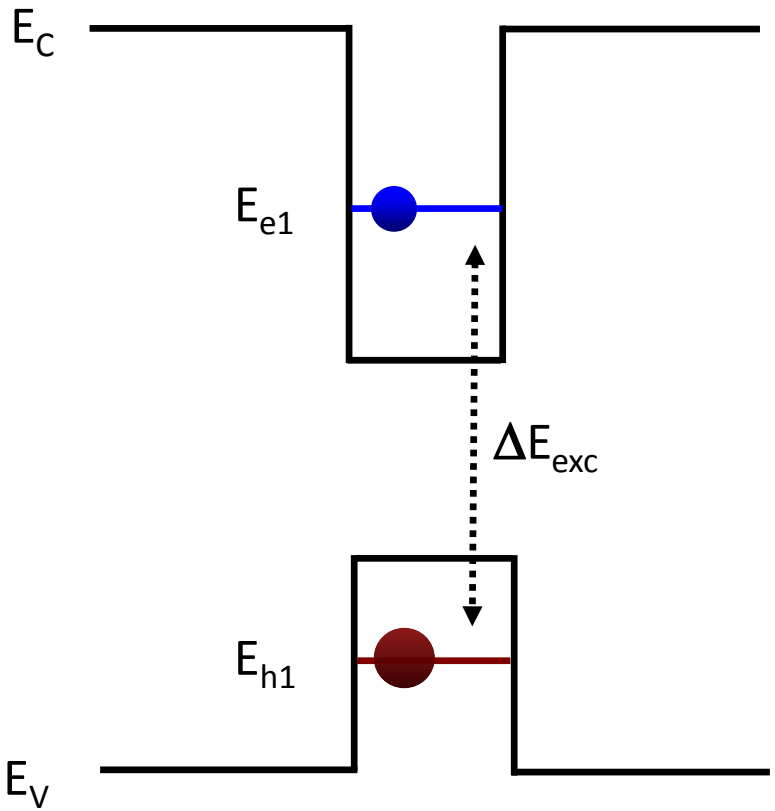

# Coupling with light: trions

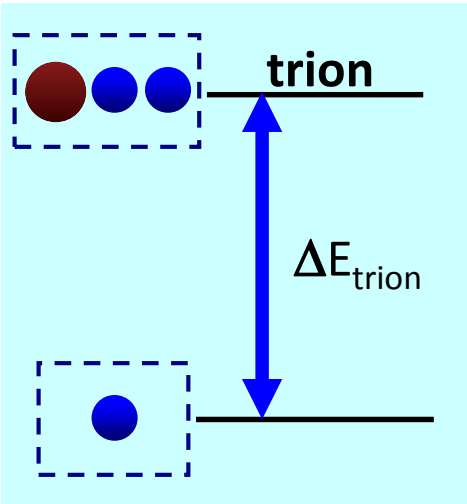


Photon $h\nu = \Delta E_{trion}$

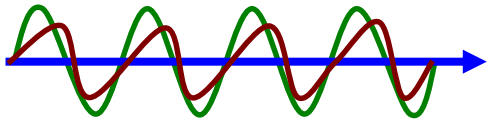

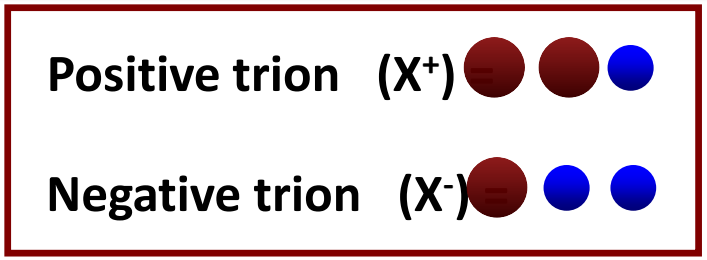


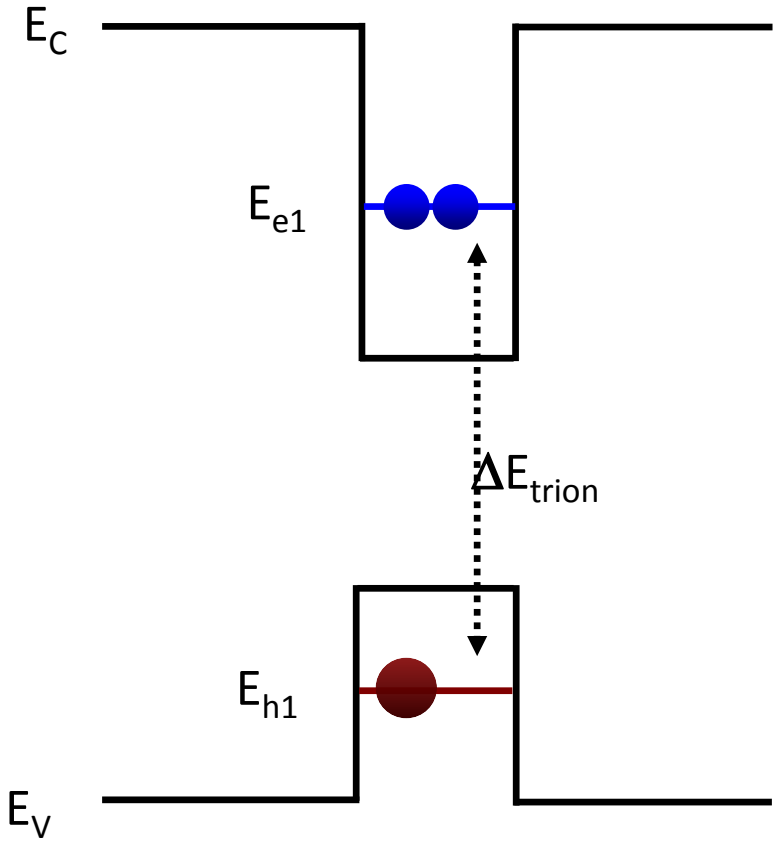

# Polarizaiton effects

Photon $h\nu=\Delta E$

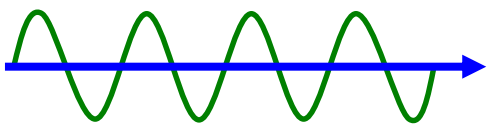

Linear polarization, V[1,0,0]

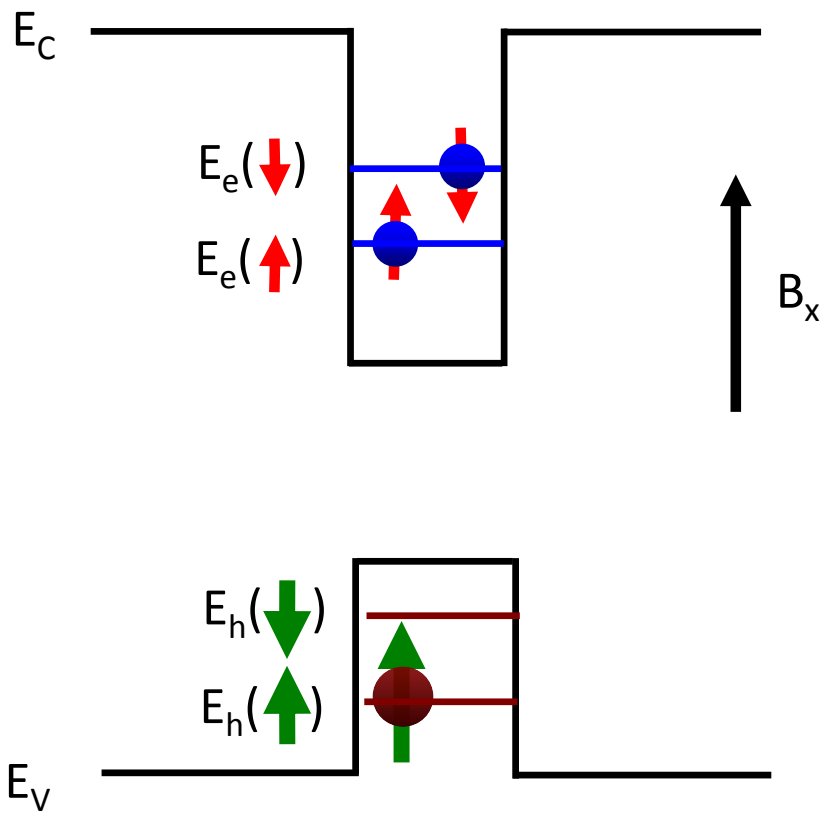

# Polarizaiton effects

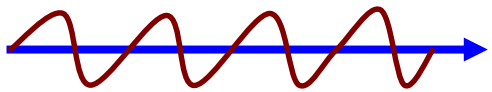

Linear polarization, H[0,1,0]

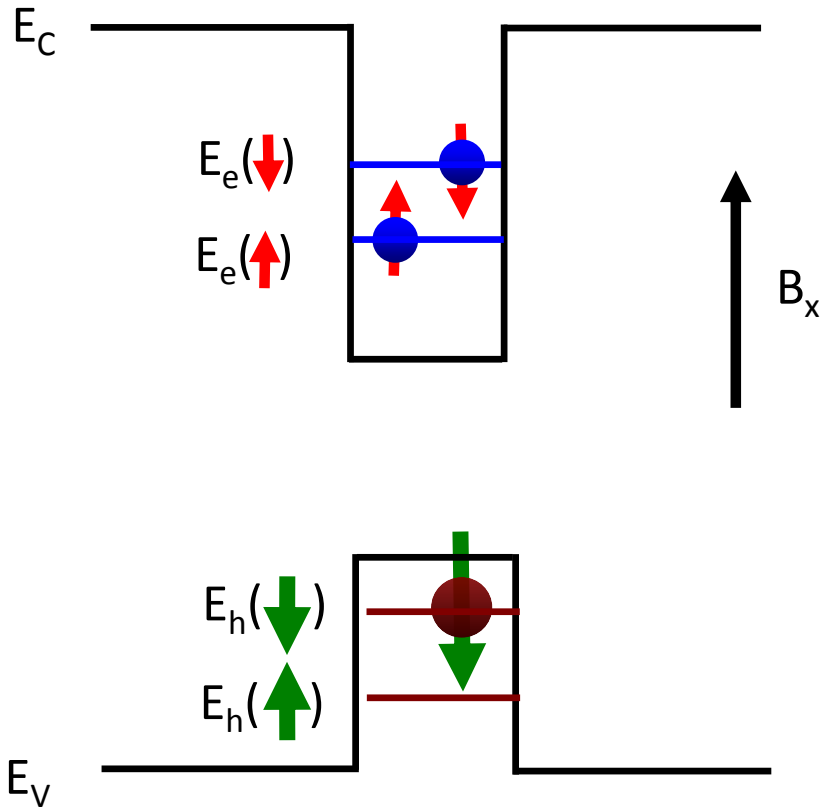

# Selection rules

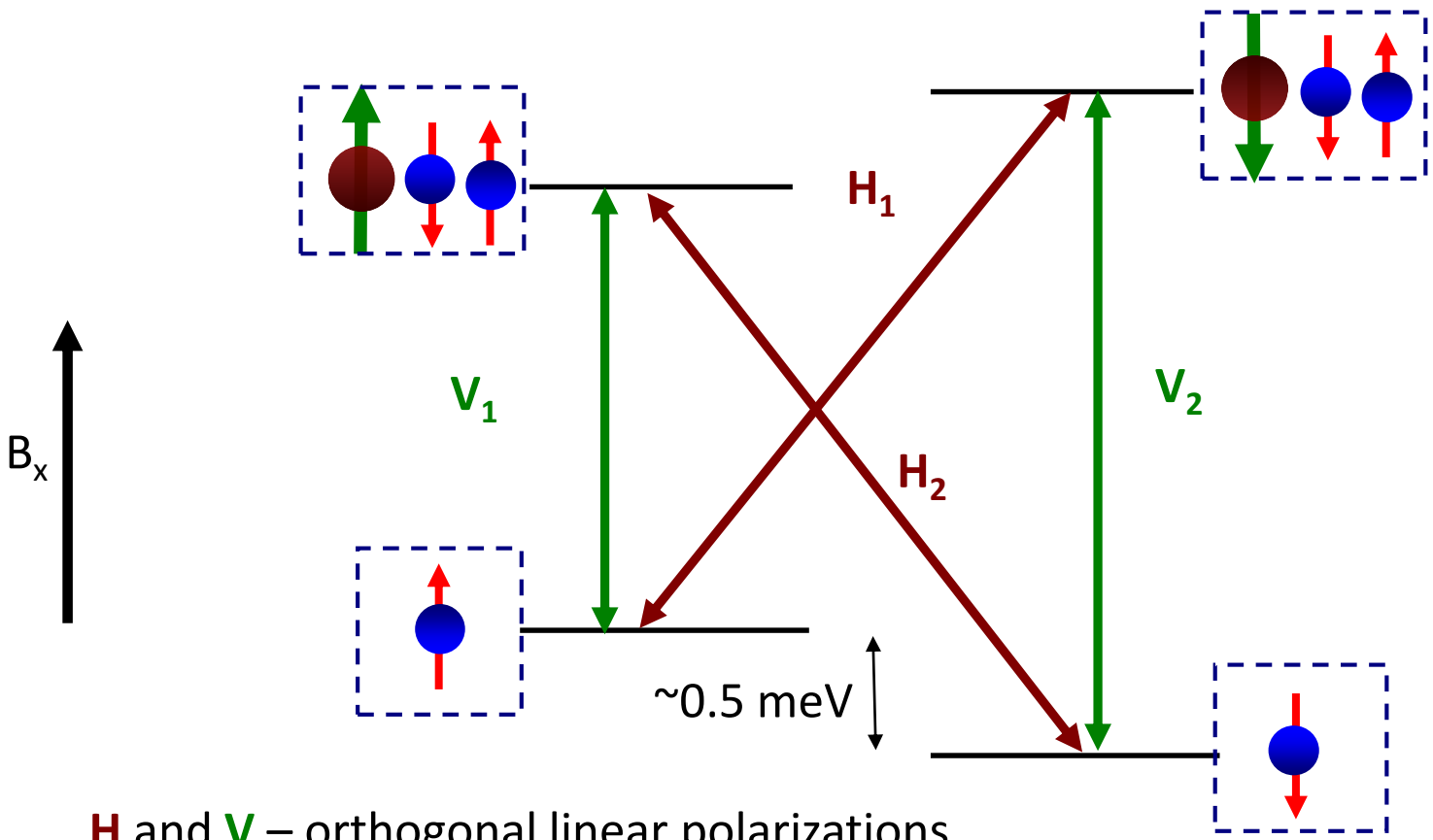


**H** and **V** – orthogonal linear polarizations

Different states can be coupled using polarization and frequency selection.

# Setup

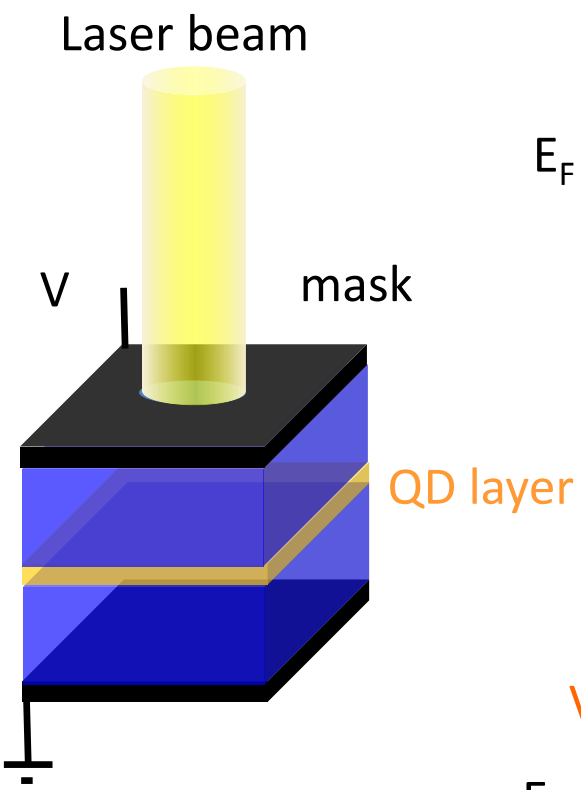
Laser beam
V
mask
QD layer

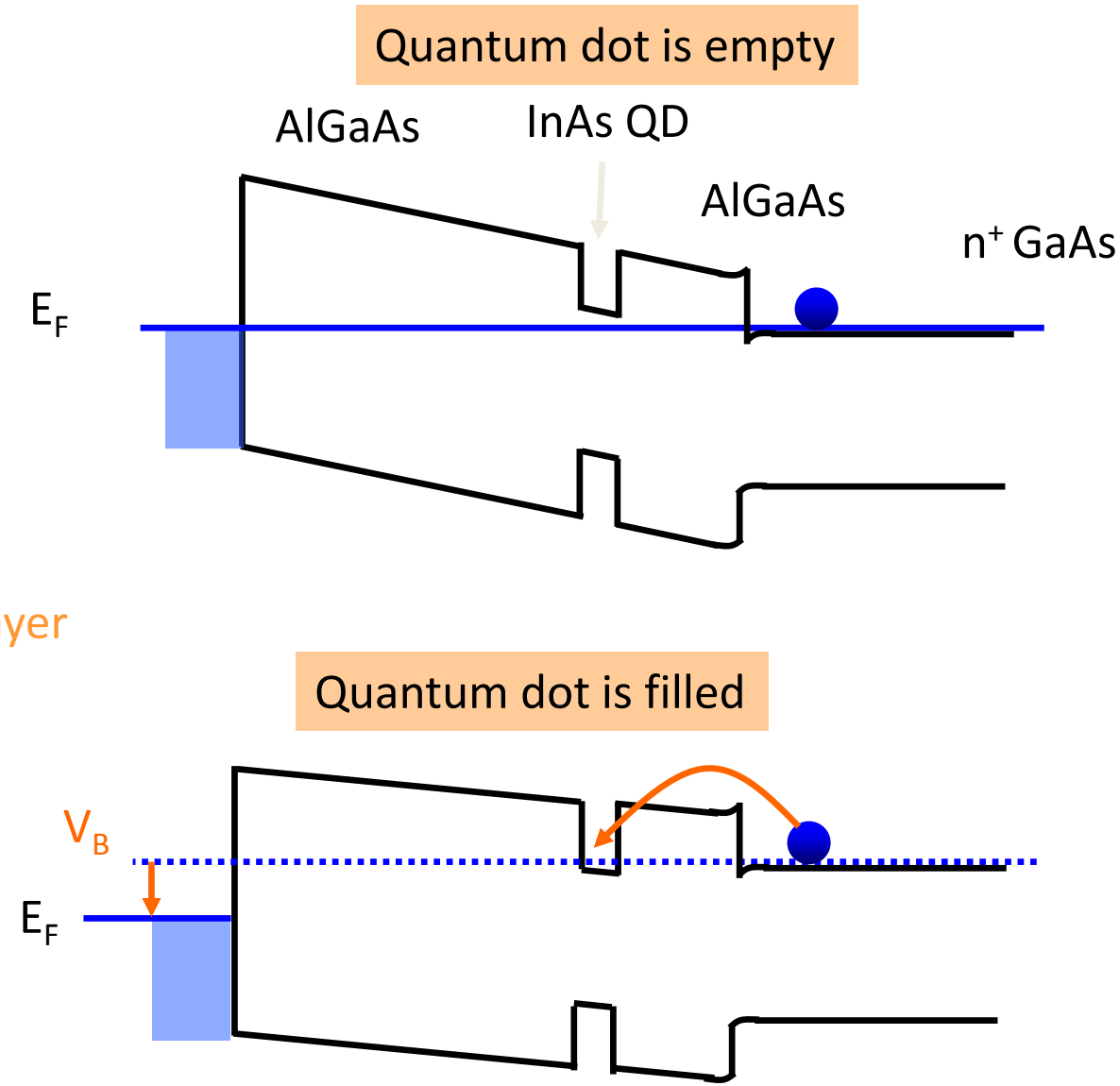
Quantum dot is empty
AlGaAs
InAs QD
AlGaAs
n+ GaAs
EF
Quantum dot is filled
VB
EF

# Charges in single QDs

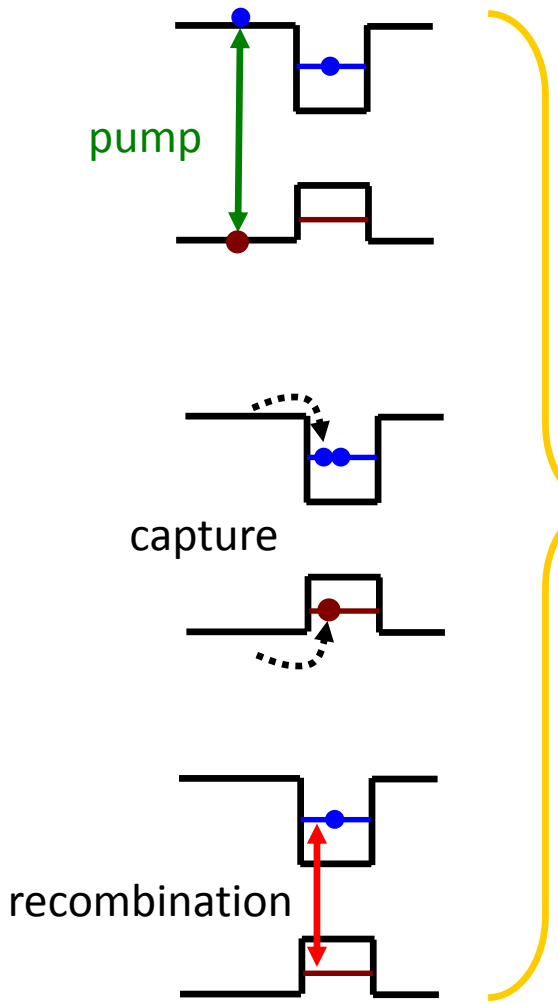


Photoluminescence

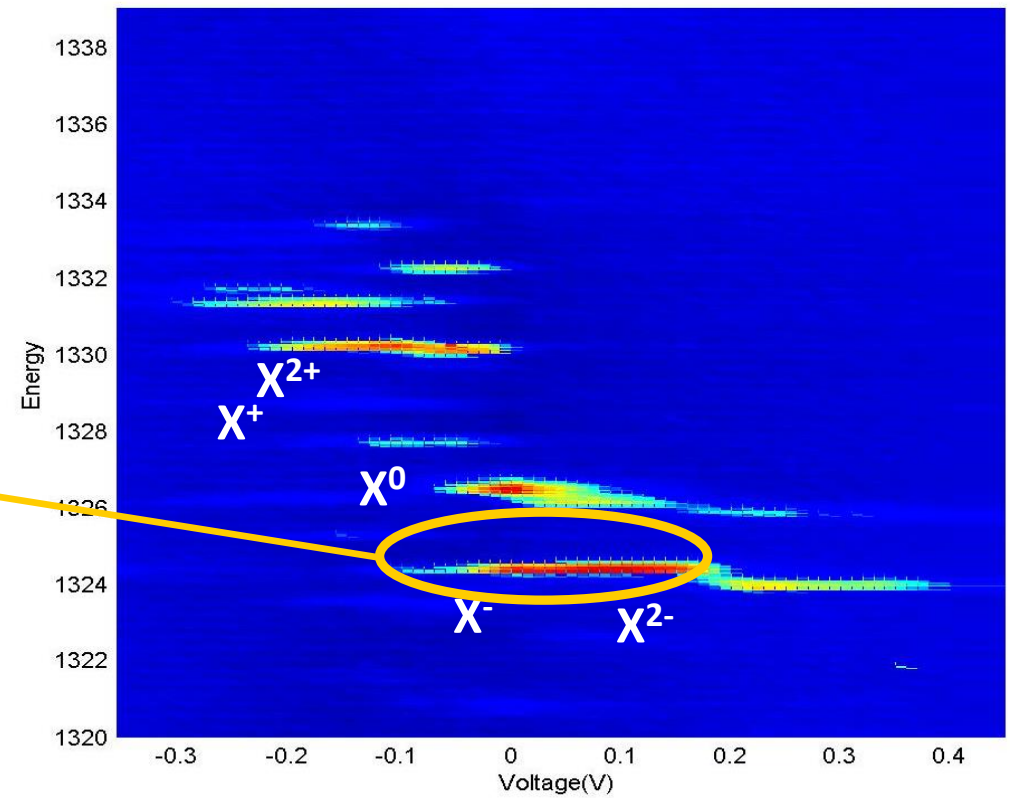


X. Xu, *et. al.,* PRL **99**, 097401 (2007)